Surface Area and Volume
An ADE Mathematics Lesson
Days 1-10

Author	ADE Content Specialists
Grade Level	10th grade
Duration	Ten days

Aligns To

Mathematics HS:
Strand 3: Patterns, Algebra, and Functions
Concept 3: Algebraic Representations
PO 1. Create and explain the need for equivalent forms of an equation or expression.

Strand 4: Geometry and Measurement
Concept 1: Geometric Shapes
PO 1. Use the basic properties of a circle (relationships between angles, radii, intercepted arcs, chords, tangents, and secants) to prove basic theorems and solve problems.
PO 2. Visualize solids and surfaces in 3-dimensional space when given 2-dimensional representations and create 2-dimensional representations for the surfaces of 3-dimensional objects.
PO 3. Create and analyze inductive and deductive arguments concerning geometric ideas and relationships.
PO 6. Solve problems using angle and side length relationships and attributes of polygons.
Concept 4: Measurement
PO 5. Calculate the surface area and volume of 3-dimensional figures and solve for missing measures.

Strand 5: Structure and Logic
Concept 1: Algorithms and Algorithmic Thinking
PO 1. Select an algorithm that explains a particular mathematical process; determine the purpose of a simple mathematical algorithm.

Connects To

Mathematics HS:
Strand 1: Number and Operations
Concept 3: Estimation
PO 2. Use estimation to determine the reasonableness of a solution.

Strand 3: Patterns, Algebra, and Functions
Concept 3: Algebraic Representations
PO 2. Solve formulas for specified variables.

Strand 4: Geometry and Measurement
Concept 1: Geometric Shapes
PO 4. Apply properties, theorems, and constructions about parallel lines, perpendicular lines, and angles to prove theorems.
PO 7. Use the hierarchy of quadrilaterals in deductive reasoning.
Concept 4: Measurement
PO 1. Use dimensional analysis to keep track of units of measure when converting.
PO 3. Determine the effect that changing dimensions has on the perimeter, area, or volume of a figure.

Strand 5: Structure and Logic
Concept 2: Logic, Reasoning, Problem Solving, and Proof
PO 3. Evaluate a solution for reasonableness and interpret the meaning of the solution in the context of the original problem.

Aligns To	Connects To
Mathematics HS: **Concept 2: Logic, Reasoning, Problem Solving, and Proof** **PO 1.** Analyze a problem situation, determine the question(s) to be answered, organize given information, determine how to represent the problem, and identify implicit and explicit assumptions that have been made. **PO 2.** Solve problems by formulating one or more strategies, applying the strategies, verifying the solution(s), and communicating the reasoning used to obtain the solution(s). **PO 4.** Generalize a solution strategy for a single problem to a class of related problems; explain the role of generalizations in inductive and deductive reasoning. **PO 5.** Summarize and communicate mathematical ideas using formal and informal reasoning. **PO 7.** Find structural similarities within different algebraic expressions and geometric figures.	

Overview

It is often necessary to find the surface area or volume of 3-D objects. Surface area is easier if you conceptually understand what finding the surface area of an object means. You will recognize the similarities and difference between finding surface areas and volumes of prisms and pyramids.

Purpose

Finding the surface area and volume of 3-D objects allows you to solve problems in which you must find either the capacity of a 3-D object or the amount of actual surface area that a 3-D object contains.

Materials

- Surface Area and Volume worksheets
- Ruler
- Play-doh® or modeling dough
- Recipes for Modeling Dough handout
- Graph paper or other lined paper
- Unlined paper

Objectives

Students will:

- Find the surface area of prisms and pyramids.
- Find the volume of prisms and pyramids.
- Develop the formulas to find the surface areas and volumes of prisms and pyramids.
- Solve contextual problems that involve prisms and pyramids.

Lesson Components

Prerequisite Skills: In 7th and 8th grade mathematics, you learned to find area of two-dimensional objects. You will extend this concept to find the surface area of three-dimensional objects. You found volumes of very simple three-dimensional objects such as rectangular prisms. You will expand this to find the volumes of more complex three-dimensional objects. You need to be familiar with the various types of polygons to be able to name three-dimensional objects.

Vocabulary: *area, surface area, polyhedron, volume, prism, pyramid, base, height, slant height, rectangular prism, polygon, cylinder, cube, lateral surface area, total surface area, triangular prism, triangular pyramid, pentagonal prism, pentagonal pyramid, hexagonal prism, hexagonal pyramid*

Session 1 (6 days)

1. Find the lateral and total surface area of different forms of prisms.
2. Find the lateral and total surface area of different forms of pyramids.

Session 2 (4 days)

1. Find the volumes of different forms of prisms.
2. Find the volumes of different forms of pyramids.

Assessment

There are three assessments for this lesson, one assessment after Session 1 and two assessments after Session 2. You will be able to pinpoint your errors and misconceptions before moving on to more complicated problems using surface area and volume.

Surface Area
Session 1

To find the surface area of a three-dimensional object, it is important to recognize the names of each object. A **prism** is a three-dimensional figure called a polyhedron made up of two parallel congruent faces and lateral faces that are parallelograms. A prism is named for its base. Examples of three-dimensional objects that have two bases are shown below.

A prism with square bases is called a **cube**.

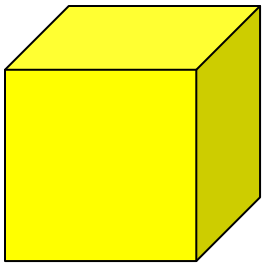

A prism with rectangles as bases is called a **rectangular prism**.

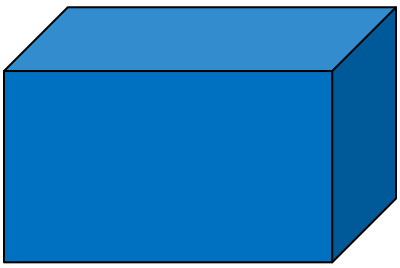

A prism with triangles as bases is called a **triangular prism**.

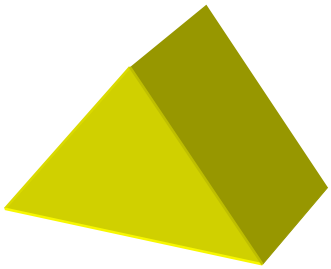

A prism with hexagons as bases is called a **hexagonal prism.**

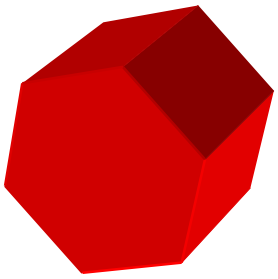

A **pentagonal prism** would be a prism that has pentagons as its bases.

An **octagonal prism** would be a prism that has octagons as its bases.

A **cylinder** is a 3-dimensional figure composed of two congruent and parallel circular regions joined by a curved surface.

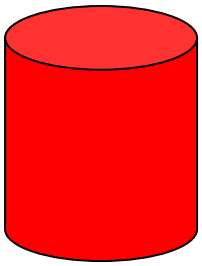

- To find the **lateral surface area** of a prism, find the area of each of the faces of the prism excluding the bases. Add the areas of these faces together to find lateral surface area.
- To find the **total surface area** of a prism, add the areas of the two bases to the lateral surface area.
- Remember that surface area is always in square units.

Example 1: Find the lateral surface area and the total surface area of the rectangular prism shown below.

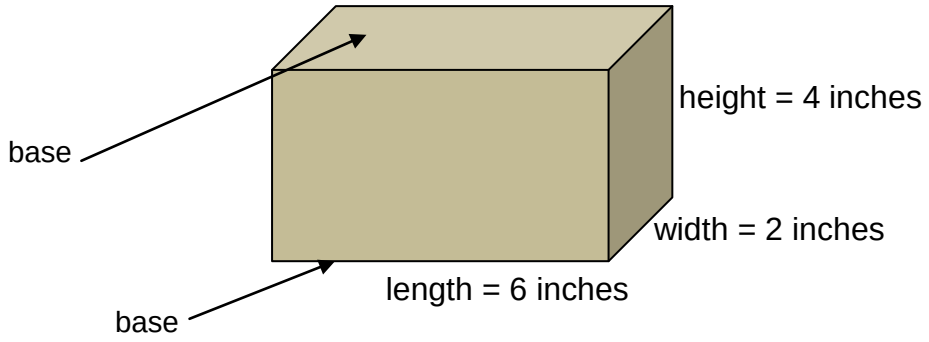

Solution:

To find the <u>lateral surface area</u>, find the area of the four faces. Two of these faces have an area of 4 inches x 2 inches. Two of these faces have an area of 4 inches by 6 inches.

$$2(4 \bullet 2) + 2(6 \bullet 4) = 64$$

Therefore the lateral surface area of this rectangular prism is 64 square inches.

To find the <u>total surface area</u>, find the area of the two bases and add this on to the lateral surface area. Each base is 6 inches x 2 inches. The area of each base is 12 square inches. The area of both bases would be 24 square inches. Add this to 64 square inches. The total surface area of the rectangular prism is 88 square inches.

Example 2:

Find the lateral surface area and the total surface area of the cube shown below. Each side of the cube is 5 centimeters.

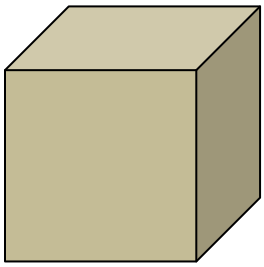

Solution:

The lateral surface area of the cube is 4 times one face as each face of a cube is identical. Since each edge is 5 centimeters, the area of each face is $5^2 = 25$ square centimeters. The lateral surface area is 4 x 25 square centimeters or 100 square centimeters.

The total surface area of the cube is the lateral surface area plus the surface area of the bases. Each base is 25 square centimeters. The total surface area is 100 square centimeters plus the area of the two bases which is 50 square centimeters. The area of the cube is 150 square centimeters.

We could have easily found that the total surface area of the cube was 150 square centimeters by multiplying the area of one face of the cube by six. 6(25) = 150 sq. cm.

It is very helpful to make a three dimensional object out of modeling dough to calculate the surface area. Make a rectangular prism out of one color of modeling dough and a cube out of another color. Do not make the cube and rectangular prisms too small or it will be difficult to measure them. Draw each of these in the boxes provided. Measure the length, width, and height of the rectangular prism and indicate this on your diagram. Measure the edge of the cube and indicate this on your drawing. Find the lateral surface area and total surface area of the rectangular prism and cube showing all work.

DIAGRAM OF RECTANGULAR PRISM

Lateral Surface Area

Total Surface Area

DIAGRAM OF CUBE

Lateral Surface Area

Total Surface Area

Find the lateral surface area and total surface area of each figure shown.

Cube with edges of 4 inches

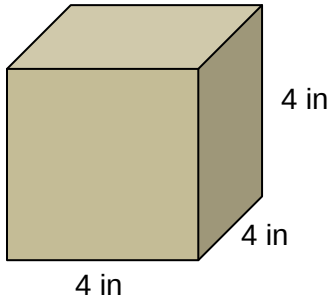

Rectangular prism with length of 10 cm, width of 6 cm, and height of 7 cm.

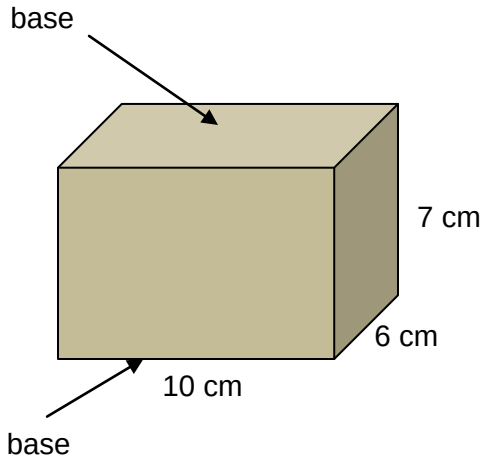

Surface Area
Assessment 1

Find the lateral surface area and total surface area of each figure shown. Show all your work in the space provided.

Cube with edges of 6 inches

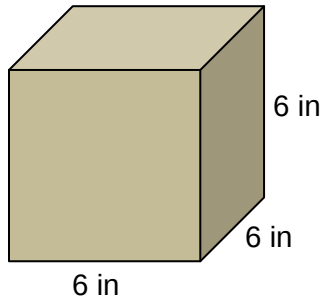

Rectangular prism with length of 9 cm, width of 5 cm, and height of 6 cm.

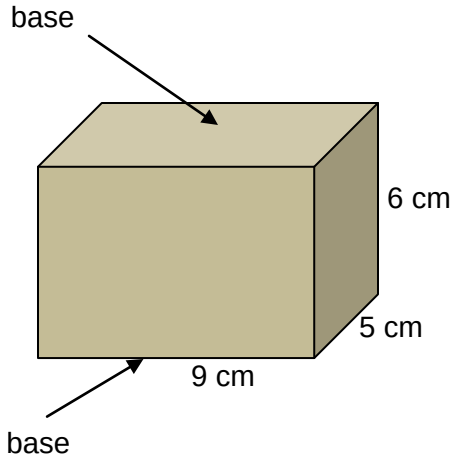

A **pyramid** is a three-dimensional figure whose base is a polygon and whose lateral faces are triangles that share a common vertex. A pyramid is named by its base. A triangular pyramid has a base that is a triangle. A square pyramid has a base that is a square. A hexagonal pyramid has a base that is a hexagon.

Example 1:

Find the total surface area of the square pyramid as shown.

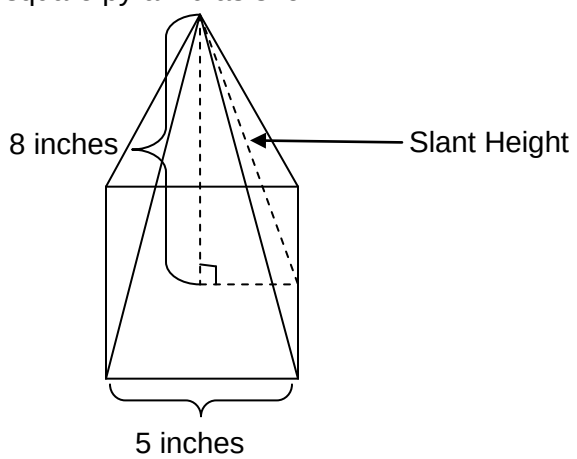

Solution:

To find the surface area of a pyramid, it is necessary to find the slant height of the pyramid. Consider the square pyramid. The base of the pyramid is a square with a side of 5 inches. Therefore the area of the base would be 5 inches x 5 inches or 25 square inches. Each of the other four sides is a triangle. It is necessary to find the area of one of the triangles and then multiply this by four to obtain the area of all four triangles.

Look at the triangle indicated by dotted lines in the pyramid. The dimensions of the triangle are shown in the drawing below. Use the Pythagorean Theorem to find the slant height.

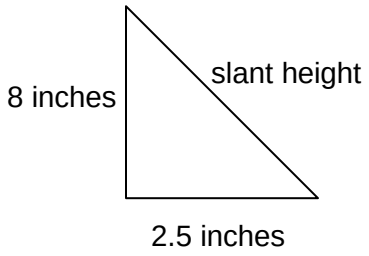

$$c^2 = a^2 + b^2 \Rightarrow c^2 = 8^2 + 2.5^2 = 70.25 \Rightarrow c \approx 8.4$$

The slant height is approximately 8.4 inches.

The area of each triangular face is given by

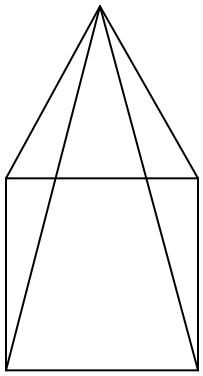

$$A = \frac{1}{2} b \bullet h$$

$$A = \frac{1}{2} b \bullet h \;\Rightarrow\; A = \frac{1}{2} \bullet 5 \bullet 8.4 \approx 21 \text{ square inches}$$

There are four of these triangles so that the lateral surface area is 4 x 21 square inches or 84 square inches. Add the area of the base onto the lateral surface area to obtain the total surface area of the square pyramid.

Total surface area ≈ 25 + 84 square inches ≈ 109 square inches.

Example 2

Find the lateral surface area and total surface area of the Great Pyramid of Giza whose base is a square. The length of one of the bases is 230 meters and its original height was 146 meters.

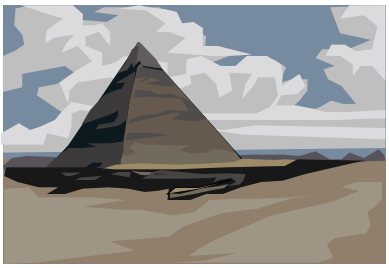

Solution:

The area of the base is a square whose side is 230 meters.

$$230m \bullet 230m = 52{,}900m^2$$

In order to find the area of each of the triangular faces, it is necessary to find the slant height of the pyramid. Use the Pythagorean Theorem to find this slant height.

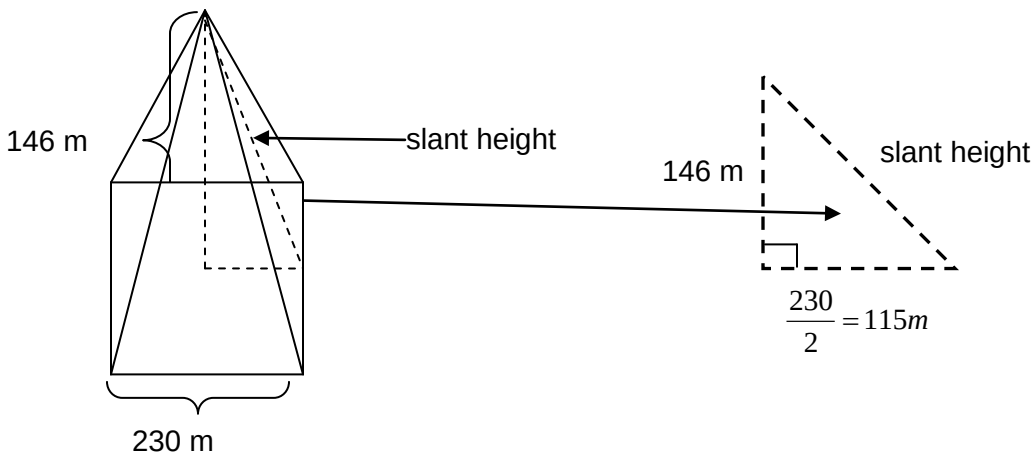

$$c^2 = a^2 + b^2 \Rightarrow c^2 = 146^2 + 115^2 = 34{,}541 \Rightarrow c \approx 185.9\ m$$

The area of each of the four triangular sides is given by

$$A = \frac{1}{2} b \bullet h \ \Rightarrow\ A = \frac{1}{2} \bullet 230m \bullet 185.9m = 21{,}378.5\ m^2$$

The area of the four triangular sides is $4 \bullet 21{,}369m^2 = 85{,}516m^2$.

Therefore the lateral surface area of the pyramid is $85{,}516\ m^2$.

The total surface area of the pyramid is $52{,}900\ m^2 + 85{,}516\ m^2 \approx 138{,}416\ m^2$.

Problem 1:

Find the lateral and total surface area of a square pyramid whose base is 6 feet and whose height is 4 feet. Draw the pyramid and show all your work in the space provided.

Problem 2:

Consider the rectangular pyramid below. Find both its lateral and total surface area. Show all your work in the space provided. (Note – You may make this figure with modeling dough to calculate the surface area.)

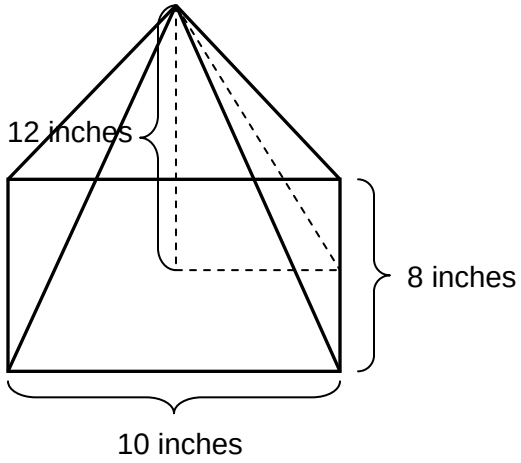

Volume
Session 2

- To find the volume of a prism, find the area of the base of the figure, and multiply this by its height. $V = Bh$ where *B* is the area of the base.
- To find the volume of a pyramid, find the area of the base of the figure, and multiply by its height. Then take one-third of this answer to find the volume. $V = \frac{1}{3}Bh$ where *B* is the area of the base.
- The units for volume are always in cubic units.

Example 1: CUBE

Find the volume of a cube whose edge is 5 cm.

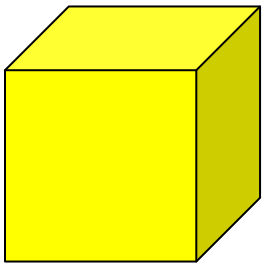

To find the volume of a cube, multiply the area of the base ($A = s^2$) by the height of the cube. Since a cube has all three dimensions the same, the cube's height will also be s. Therefore, the volume of the cube will be $V = s^3$ which is often represented by $V = e^3$ where e stands for the edge of the cube which is the same as the side of the cube.

.

Solution: $V = e^3 \Rightarrow V = 5^3 = 125cm^3$. The volume of the cube is $125cm^3$.

Example 2: RECTANGULAR PRISM

Find the volume of a rectangular prism whose width is 5 inches, length is 7 inches, and height is 10 inches.

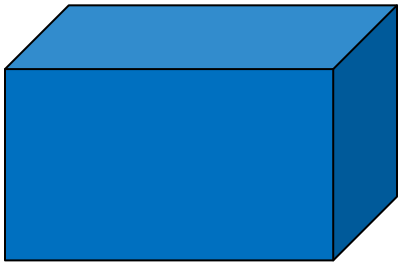

To find the volume of a rectangular prism, multiply the area of the base ($A = lw$) by the height of the rectangular prism. The volume of the rectangular prism will be:

$$V = Bh \Rightarrow V = lwh$$

Solution:

$$V = Bh \Rightarrow V = lwh \quad V = 5inches \bullet 7inches \bullet 10inches = 350in^3$$

$$V = 350 \ \ in^3$$

Example 3: CYLINDER

Find the volume of a cylinder whose height is 15 cm and which has a radius of 4 cm. Express the answer in terms of π and in approximate units.

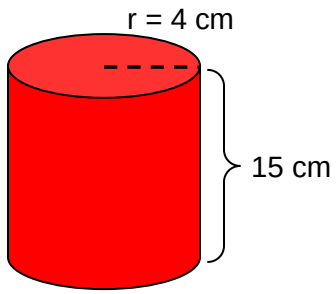

To find the volume of a cylinder, find the area of the base and multiply it by the height of the cylinder. Since the base of a cylinder is a circle, the area of the base can be found using the formula, $A = \pi \bullet r^2$. To find the volume of the cylinder, multiply this by the height.

$V = Bh \Rightarrow V = \pi \bullet r^2 \bullet h$.

Solution:

$$V = Bh \Rightarrow V = \pi \bullet r^2 \bullet h$$

$$V = \pi \bullet 4^2 \bullet 15\ cm^3$$

$$V = \pi \bullet 16 \bullet 15 = 240\pi\ cm^3$$

$$V = 240\pi \approx 753.98\ cm^3$$

Example 4: TRIANGULAR PRISM

Find the volume of a triangular prism whose dimensions are as follows: base = 8 cm, height of base (h_1) = 5 cm, height of prism (h_2) = 12 cm. The base is a triangle so use the formula for calculating the area of a triangle times the height of the prism to determine the volume of the prism.

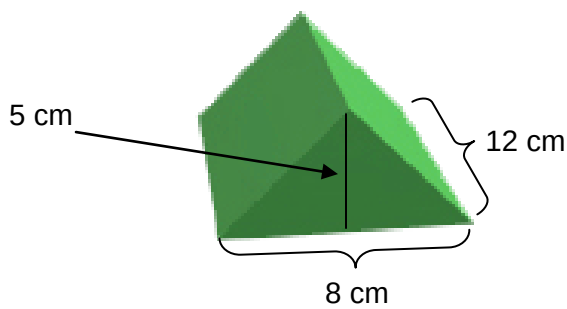

$$V = Bh \Rightarrow V = \frac{1}{2} \bullet b \bullet h_1 \bullet h_2 \quad \Rightarrow V = \frac{1}{2} \bullet 8 \bullet 5 \bullet 12 \Rightarrow V = 240\ cm^3$$

There is a relationship between the volume of a prism and the volume of a pyramid. The volume of the pyramid is 1/3 the volume of the prism that has the same base and height. The volume of a pyramid is equal to 1/3 the area of its base times its height.

$$V = \frac{1}{3} B \bullet h$$

Example 5: SQUARE PRYAMID

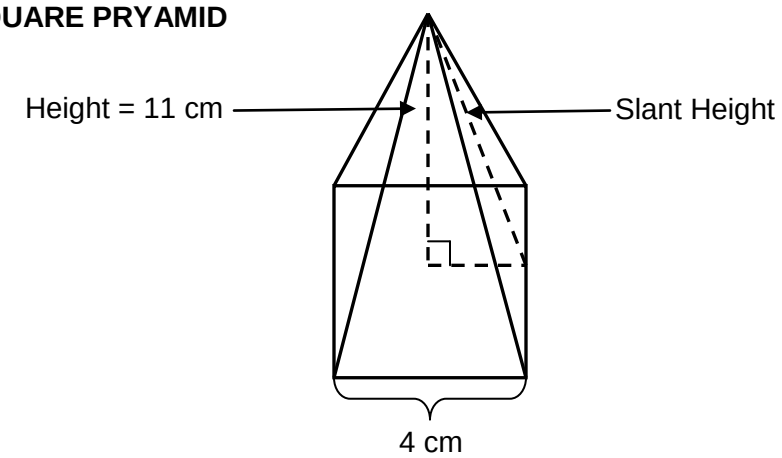

Find the volume of the square pyramid above whose height is 11 cm and which has a side of 4 cm for its square base. Can you find the slant height of this pyramid?

$$V = \frac{1}{3}B \bullet h \Rightarrow V = \frac{1}{3} \bullet 4^2 \bullet 11 = 58.67\ cm^3$$

Note that the height makes a right triangle with half of the side of the square and the slant height.

$$c^2 = a^2 + b^2 \Rightarrow c^2 = 2^2 + 11^2 \Rightarrow c^2 = 4 + 121 = 125 \Rightarrow c = \sqrt{125} \approx 11.18\ cm$$

The slant height is approximately 11.18 cm.

Problem 1:

Find the volume of a square pyramid whose base is 6 feet and whose height is 4 feet. Draw the pyramid and show all your work in the space provided.

Problem 2:

Find the volume of the rectangular pyramid shown below. Show all your work in the space provided. (Note – you may make this figure with modeling dough to calculate the volume.)

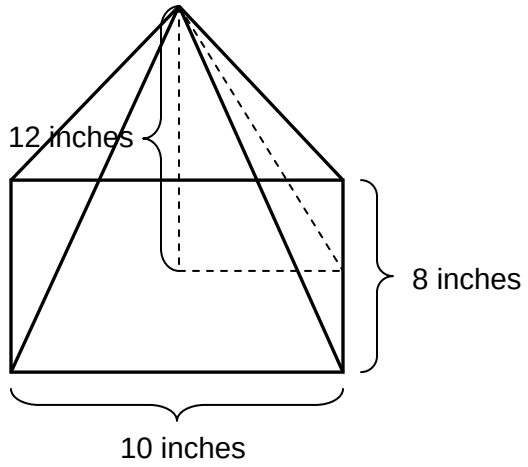

Problem 3: Find the volume of a cube whose edge is 3 inches. Draw the cube and show your work in the space provided.

Problem 4: CYLINDER

Find the volume of a cylinder whose height is 4 in and which has a radius of 2 in. Express the answer in terms of π and in approximate terms. Draw the cylinder and show your work in the space provided.

Volume of Prisms
Assessment 2

Find the volume of each figure shown. Show all your work in the space provided.

Cube with edges of 7 inches

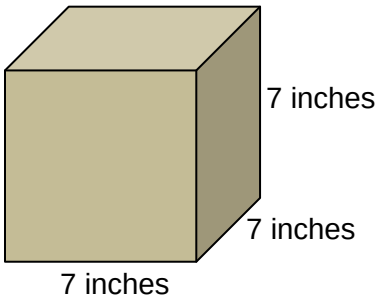

Rectangular prism with length of 3 cm, width of 2 cm, and height of 8 cm.

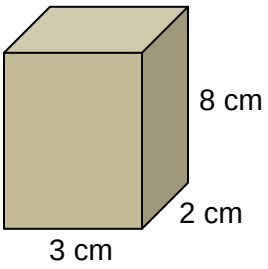

Volume of Pyramids
Assessment 3

Find the volume of the figure shown below. Show all your work in the space provided.

Rectangular pyramid with length of 8 cm, width of 6 cm, and height of 10 cm.

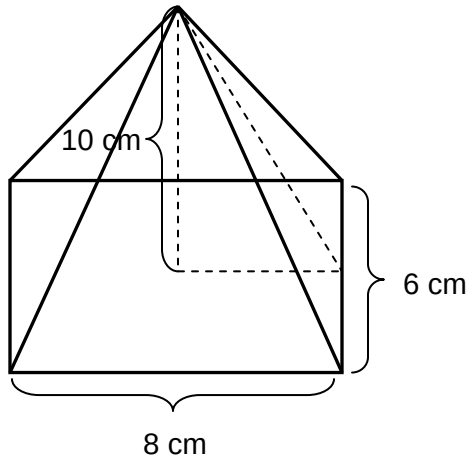

Extensions

1. Use modeling dough to construct three-dimensional objects, diagram them, and calculate their surface area and volume (Enrichment 1). Compare and contrast prisms and pyramids using modeling dough (Enrichment 2).

2. Put together three-dimensional objects of more than one shape and find the surface area and volume of the new object.

3. Find the surface area or volume of things you see everyday such as swimming pools, cans of food, boxes of cereal, etc. Calculate how much wrapping paper is necessary to wrap a present for a friend, given a particular size box.

Surface Area and Volume with Modeling Dough
Enrichment 1

1. Make a rectangular prism out of modeling dough. Make the prism large enough to measure and diagram. When you have completed making the figure, follow the steps below. Several worksheets are provided to help you diagram your figure and calculate the surface area and volume.
    a. Diagram the figure using a ruler and marking the measurements on a clean sheet of paper.
    b. Calculate the lateral surface area, total surface area, and volume of your figure. Be sure to show all your work.
    c. Indicate your answer for each on a sheet of paper by circling the answers or highlighting them.
2. Now make three of the following figures from your modeling dough. You must build at least one prism and at least one pyramid. Repeat the steps listed in #1a-1c above with each of these figures.
    a. cube
    b. triangular prism
    c. pentagonal prism
    d. hexagonal prism
    e. cone
    f. cylinder
    g. triangular pyramid
    h. square pyramid
    i. rectangular pyramid
    j. pentagonal pyramid
    k. hexagonal pyramid
3. Enrichment – Repeat steps 1a-1c using a sphere. Note that you cannot calculate lateral area of a sphere (only total surface area and volume).

$$\text{Formula for the Volume of a Sphere: } V = \frac{4}{3}\pi r^3$$

$$\text{Formula for the Total Surface Area of a Sphere: } T = 4\pi r^2$$

MODELING DOUGH WORKSHEETS

Diagram your rectangular prism and calculate the surface area in the space.

DIAGRAM	LATERAL SURFACE AREA
TOTAL SURFACE AREA	**VOLUME**

Diagram your figure and calculate the surface area in the space.

The figure I choose is a _____.

DIAGRAM	LATERAL SURFACE AREA
TOTAL SURFACE AREA	**VOLUME**

Diagram your figure and calculate the surface area in the space.

The figure I choose is a _____.

DIAGRAM	LATERAL SURFACE AREA
TOTAL SURFACE AREA	**VOLUME**

Diagram your figure and calculate the surface area in the space.

The figure I choose is a _____.

DIAGRAM	LATERAL SURFACE AREA
TOTAL SURFACE AREA	**VOLUME**

Surface Area and Volume
Comparing and Contrasting Prisms and Pyramids
Enrichment 2

Using modeling dough, construct a rectangular prism and a rectangular pyramid according to the given instructions. Then follow the instructions to repeat the same activity, constructing a cylinder and a cone.

RECTANGULAR PRISM AND RECTANGULAR PYRAMID

1. What is the difference between a prism and a pyramid?

2. Define the following two terms:

    a. rectangular prism

    b. rectangular pyramid

3. Using modeling dough, build a **rectangular prism**. Make certain that the prism is not too small to measure. In the space below, diagram the rectangular prism. Measure its height, width, and length and mark these measurements on your diagram. Make certain to indicate if the measurements are in centimeters or inches.

4. Calculate the lateral surface area of the prism showing all your work in the space provided.

5. Calculate the total surface area of the prism showing all your work in the space provided.

6. Calculate the volume of your prism showing all your work in the space provided.

7. Using modeling dough, build a **rectangular pyramid** that has exactly the same base and height as the rectangular prism you just built, diagrammed and measured. Diagram this pyramid in the space provided. Measure its height, width, and length and mark these measurements on your diagram. Make certain to indicate if the measurements are in centimeters or inches.

8. Calculate the lateral surface area of the pyramid showing all your work in the space provided.

9. Calculate the total surface area of the pyramid showing all your work in the space provided.

10. Calculate the volume of your prism showing all your work in the space provided.

11. Compare and contrast your findings for the rectangular prism with that for the rectangular pyramid. What is similar? What is different? Be very specific.

SIMILARITIES
DIFFERENCES

CYLINDERS AND CONES

1. What is the difference between a cylinder and a cone?

2. Define the following two terms:

   a. Cylinder

   b. Cone

3. Using modeling dough, build a **cylinder**. Make certain that the cylinder is not too small to measure. In the space below, diagram the cylinder. Measure its height and the radius or diameter of its base and mark these measurements on your diagram. Make certain to indicate if the measurements are in centimeters or inches.

4. Calculate the lateral surface area of the cylinder showing all your work in the space provided. Hint - Remember that a cylinder has two bases and that the area around the cylinder would be a rectangle if you could cut it out (think about the label on a can of soup.)

5. Calculate the total surface area of the cylinder showing all your work in the space provided.

6. Calculate the volume of your cylinder showing all your work in the space provided.

7. Using modeling dough, build a **cone** that has exactly the same base and height as the cylinder you just built, diagrammed and measured. Diagram this cone in the space provided. Measure its height and the radius or diameter of its base and mark these measurements on your diagram. Make certain to indicate if the measurements are in centimeters or inches.

Do you see notice anything interesting when looking at your work with the rectangular prism and rectangular pyramid and your work with the cylinder and cone? Explain your answer in the space provided.

Sources

2008 AZ Mathematics Standards
2006 NCTM Curriculum Focal Points
2000 NCTM Principles and Standards
2008 The Final Report of the National Mathematics Advisory Panel
1999 Bringing the NCTM Standards to Life, Exemplary Practices from High Schools
http://www.repertorium.net/rostau/measures.html

RECIPES FOR MODELING DOUGH

Traditional Dough

- 1 cup flour
- 1 cup warm water
- 2 teaspoons cream of tartar
- 1 teaspoon oil
- 1/4 cup salt
- food coloring

Mix all ingredients, adding food coloring last. Stir over medium heat until smooth. Remove from pan and knead until blended smooth. Place in plastic bag or airtight container when cooled. Properly stored, it will last for a long time.

No-Cook Dough

- 3 cups flour
- 3 cups salt
- 3 tablespoons alum

Combine ingredients and slowly add water, a little at a time. Mix well with spoon. As mixture thickens, continue mixing with your hands until it has the feel of clay. If it feels too dry, add more water. If it is too sticky, add equal parts of flour and salt. Store in an air-tight container or plastic bag.

Perfect Dough

- 2 cups flour
- 1 cups salt
- 2 cups water
- 2 tablespoons baby oil (works better than regular oil)
- 2 tablespoons cream of tartar
- liquid food coloring

Combine dry ingredients. Add water and oil. Stir well. Microwave on high 4 to 5 minutes. Stir again. Microwave another minute. Stir. Continue to microwave one minute, then stir, until dough is the consistency of mashed potatoes. Cool it enough to touch. Knead in food coloring until dough is desired color. Store in an air-tight container or plastic bag.