Celebrate Arizona

DESERT ADVENTURES

ARIZONA SCIENCE CENTER
Never stop wondering.

STEM CLUB

Jr. Scientists will develop observation skills to encourage viewing the Sonoran Desert up-close and through many perspectives. Jr. Scientists will look at the Sonoran Desert and interpret the interconnections to sustain a habitat for both people and animals. They then will learn how to conduct a field study to further develop observation skills while collecting, comparing and discussing data. Jr. Scientists will explore the diversity of plant life, the water cycle and water usage as well as birds, animals and solar energy. (2 hour sessions)

- What is a Desert
- Geology of the Sonoran Desert
- Solar Energy
- Desert Plants
- Desert Birds
- Desert Animals
- Water Cycle
- Water Usage
- Survival
- Human Footprint

21st Century Community Learning Centers
Soaring Beyond Expectations

Arizona Department of Education

CELEBRATE ARIZONA: WHAT IS A DESERT?

Week 1

The Science Behind The Activities	Students will develop observation skills to encourage viewing the Sonoran Desert up-close and through many perspectives. Students will look at the Sonoran Desert and interpret the interconnections to sustain a habitat for both people and animals. They then will learn how to conduct a field study to further develop observation skills while collecting, comparing and discussing data.
Activity Sequence	• My Potato – Observation • What is a Desert? (Video Clip) • Literature Connection: Here is the Southwestern Desert by Madeleine Dunphy • Desert Web – Elements of habitat (space, food, water, shelter) • Rock Talk – Observation & Classification • My Habitat – Field Study Protocol
I Pad Applications	• Cloud Browse (to view Adobe Acrobat Videos) • EasyLearn Rocks & Minerals
Setting	Classroom & Outside
Time Frame	20 minutes - 1 hour per activity
Plan Ahead	• Pack STEM To Go bags • Allow time for a snack (if provided)
To-Go	• Soil Science

ACTIVITY – My Potato

Background

Observation skills are essential to scientists. They must use their senses to understand the world around them and to study that world. This activity encourages Jr Scientists to use their observation skills to study the physical characteristics of a potato. Jr Scientists will observe using their eyes, ears, nose and hands and by collecting data through various measurements to help them more accurately record their observations.

PHYSICAL CHARACTERISTICS are features of an object or substance that are sensory or physical and can be measured (area, shape, weight, color, etc.)

Materials

- 25 STEM Club notebooks
- 25 Pencils
- 1 Sack of Red Potatoes
- 5 measuring tapes
- 5 rulers
- 5 magnifying glasses

Teacher Preparation

- Set out a handful of potatoes in the center of each group as they walk into STEM club. Have measuring tapes, rulers, and magnifying glasses among the potatoes.
- Have the word 'Observation' and 'Physical Characteristics' written on the white board.
- Explain what STEM Club is, and what topics we will be exploring throughout the ten weeks
- Distribute name buttons
- Introduce ASC instructor

Investigation

1. As the Jr Scientists walk in they should be directed to sit at a group and to observe the potatoes by looking at their physical characteristics. Move around the room asking questions, listening to their comments and expand their ideas of "observation".
2. As a group discuss observations – how did they identify one potato from another, what kinds of observations did they make, what further observations could be recorded? Use the term 'physical characteristics' and create a chart on the white board of these characteristics.
3. After the Jr Scientists share ideas, give them a few more minutes to observe the potatoes again using their peers' ideas for observation of physical characteristics of the potatoes.
4. Announce that the Jr Scientists need to pick out their favorite potato.

5. Introduce the STEM notebooks. Discuss why scientists might use notebooks during experiments and investigations. Have the Jr. Scientists write the name of and draw their favorite potato in their STEM notebooks. Be sure to have them include detailed pictures/drawings of the physical characteristics of their potato–detailing what makes their potato unique.
6. Come around the room with a bag and collect the Jr Scientists potato. Place all of the potatoes in a pile in the front of the room.
7. Ask the Jr Scientists if they feel like they know their potato well. Have them confirm their detailed knowledge of their potato by having them come find their potato at the front.
8. **Discuss:** ***Were you able to identify your potato? What made your potato different or unique from the others? Was it difficult to identify your potato from the others? What can we learn about this activity in relation to skills a scientist needs to have?***

ACTIVITY – What is a Desert?

Background

Jr. Scientists will learn about the characteristics of the desert by watching the following clip from the Desert Botanical Gardens.

Materials

- http://www.dbg.org/education-programs/digital-learning/for-students (select "What is a Desert" for grades 4-8)
- 25 STEM notebooks
- 25 pencils

Teacher Preparation

Set up a projector and computer in the classroom so all Jr Scientists will be able to see the clip.

Investigation

1. Ask Jr Scientists "What is a Desert?" Write their answers on the board.
2. Watch the clip "What is a Desert" and instruct the Jr Scientists to answer the questions in their notebook that relate to the clip.
3. At the end of the clip, discuss: ***What are the three characteristics of a desert? What makes the Sonoran Desert different from other North American Deserts? When is the rainy season in the Sonoran Desert? What plant is special to the Sonoran Desert?***

ACTIVITY – Literature Connection

Background

Jr. Scientists will continue to use their observation skills while identifying features of the Sonoran Desert as depicted in

Materials

- Here is the Southwestern Desert by Madeleine Dunphy

Teacher Preparation

- Have the Jr Scientists gather around a central reading area you will use weekly for the literature connection. You may want to consider finding a quiet place outside if available.

Investigation

1. Jr. Scientists will gather in a location that will become their read-aloud area each week. Ask the Jr Scientists if they've read the book before. If they have not, ask if they know about 'The Three Little Pigs' and share out a synopsis of the traditional tale.
2. Tell the students they will be looking for physical characteristics of a desert as depicted in the book. Have them use visual and listening skills to identify observations from the story.
3. Read the story, identifying desert observations as you read.
4. Share out observations and physical characteristics of the desert based on the book and prior knowledge.

ACTIVITY – Desert Web

Background

In this activity Jr. Scientists will identify and discuss how elements of habitat are related. The four elements of a habitat are: Space, Food, Water and Shelter.

Space is the amount of space a plant or animal needs to survive. Some living things require direct sunlight while others require shade. Some living things require miles and miles of space to fly and search for food while others stay in one place and take years to grow a foot. Space needs vary from plants to animals and within species of each. These need to be considered for survival of the living things.

Food is essential for any living thing to survive. Often the sun is essential in providing that food and must be considered when looking at survival of a living thing. The food chain must also be considered as well as weather conditions.

Water is also essential for any living thing to survive. In the Sonoran Desert water is not freely available so plant and animal adaptations have developed for native living things to survive.

Shelter is the last of the four elements of habitat. For many Arizona living things, this determines life or death against the desert elements and from predators. Together, space, food, water and

shelter determine the habitat and if it's native species can survive. For more information on the elements of habitat go to: **http://www.fws.gov/southwest/refuges/saltplains/kidshabitat.html**

For information about an example of an Arizona desert web, go to: http://www.fs.fed.us/wildflowers/pollinators/pollinator-of-the-month/lesser_long-nosed_bat.shtml to learn about the Lesser Long-nosed Bat and the Saguaro Cactus.

Materials

- Desert Web Labels
- Ball of Yarn

Teacher Preparation

Pass out Desert Web labels to each student and gather the students in a circle.

Investigation

1. Have students stand or sit in a circle. Have one student read off their label that has an element of habitat on it (for instance Saguaro Cactus). Ask students to look at their labels and see if they have a label that relates to the Saguaro. It may be 'Palo Verde or Mesquite Tree' because Saguaros often grow under nurse trees to survive frost and are protected from rodents and other creatures during their beginning years. It may also be 'Cactus Wren' because a Gila Woodpecker calls the Saguaro home by carving and living in holes in the base and arms of the Saguaro.
2. When a Jr Scientist feels they have an element on their label that relates to the previous element, they call out and the first person throws a ball of yarn to that person (holding onto the end of the ball. As this activity unfolds you will notice a "web" forming by the interconnectivity of the various habitat "elements" listed on the labels. Once every Jr Scientist has had an opportunity to share at least once (assist as needed), have the students sit down and carefully place the web on the ground.
3. **Discuss:** ***What was the Desert Web activity teaching? What did we learn from it? What elements are easiest to recognize? What elements can relate to several cards? How would people of Arizona fit into this web? Discuss the relationship between the Lesser Long-nosed Bat and the Saguaro Cactus. What will happen to the Saguaro Cacti if the Lesser Long-nosed Bat becomes extinct? What will happen to the bats if the Saguaro Cactus goes extinct?***

ACTIVITY – Rock Talk

Background

WEATHERING is the process that causes the break-up of solid rock into smaller units by wind, heat, cold and flowing water. As a result of these forces, mountains become sand. Rocks collide with other rocks and break into smaller pieces, adding finer grains to the soil. In the desert, the greatest proportion of this non-living material is sand from the weathering of sandstone, granite, limestone, shale and quartz.

Jr. Scientists will explore various ways to classify while extending their observations skills looking at rocks found in Arizona. They then will look at the physical, chemical and biological properties of the desert by continuing their exploration of field studies using soil and water samples.

Desert soil is composed of living and non-living elements. Through the continuation of learning how to conduct field studies, the Jr Scientists will study soil and water samples to gain a better understanding of a habitat and to collect and compare data between habitats.

Materials

- **Penny**
- **Stainless Steel Fork**
- **40-50 Rock samples – 5 each of 8-10 different samples**

Teacher Preparation

Distribute rock samples to each group

Investigation

1. Demonstrate how rocks turn into soil using the penny and fork. Ask students if they have cracked/broken rocks before. Are some easier than others? What rocks do you think are easier to break down? Harder? Why?
2. Have Jr Scientists observe and classify the various rocks found at their tables. Move from group to group asking them how they organized or classified the rocks into categories. Have groups take a picture once they've categorized the rocks and then encourage them to find another way to classify. Stretch their thinking when they feel like there isn't another way to classify.
3. **Discuss:** ***What types of rocks have you observed? Where might you find these rocks? How did you classify the rocks? Were you able to classify the rocks in more than one way? What else might you want to find out about the rocks?***

ACTIVITY – Field Studies

Background

Field scientists have the amazing opportunity to study their science in the field rather than in a lab. The Jr Scientists will strengthen their observation skills while learning how to study a "habitat" through field study procedures. They will learn how to observe a habitat through the lens of an ant, will generate questions about the world based on their observations and will further study the habitat by using scientific tools and procedures to collect, record and analyze data just like a real scientist does. In addition, they will develop an awareness of the natural world around them. These skills will be transferable when they are on a field trip or on a family adventure. For additional information on field studies see: http://www.alpac.ca/content/files/Terrestrial%20and%20Aquatic%20Field%20Study.pdf

Materials

- 5 Field Study Backpacks each with:
  - 1 metric tape measure (5m)
  - 8 place-markers/flags
  - 1 Shovel/trowel
  - 1 gallon size Ziploc
  - 1 thermometer
  - 1 compass
  - 1 face mask

Teacher Preparation

Identify the location you would like to do the initial field study to teach the procedures. This should be a large enough space for five groups to each have a 10m by 10m square plot to study.

Investigation

1. Take the Jr Scientists outside near the location you would like to do the initial field studies. Have them sit down and share out what they already know about field studies. Share any experience you may have. Prompt the Jr Scientists to share great places in nature they have visited. What did they observe? What would they have liked to observe further had they been given the opportunity?
2. Pull out one of the science backpacks and empty the contents. Have the Jr Scientists discuss what the "tools" are and how they would use them.
3. Share that the Jr Scientists will study a plot by using their senses to really learn about the school "habitat". Share that they will need to look closely so that they see every aspect of their plot; that they will look at their plot from an ant's perspective. In order to be consistent the plots will need to all be the same size. Demonstrate and have Jr Scientists practice measuring a 10m by 10m square using a metric measuring tape, the marker flags and a compass. It may take the Jr Scientists several tries

to get a square using cardinal directions and the measuring tools.

4. Once the Jr Scientists have mastered their skills in measuring their plot, have them observe, record and collect data. They will want to observe the habitat, elements regarding space and shelter, plant species included, evidence of human interaction with the site, and evidence of animal life. In addition, have them collect a soil sample. You will need to demonstrate how to do this (scrape off the top layer with a shovel or trowel and then dig into the ground to collect the soil). Their observations can be recorded in their STEM notebook and with digital pictures.
5. If a group finishes before the others, they may have time to do another plot field study.
6. **Discuss:** ***What did you observe during your field study? (Record observations on the white board for future data share outs). Did each plot have the same plant species or evidence of animal life? Why or why not? What skills did you gain as a Jr Scientist? What else would you have liked to have studied/what other observations or data would you have liked to have collected?***

Extension

- Have Jr Scientists study their own habitat and draw a picture
- Have Jr Scientists collect pictures of their habitat to bring to STEM club and share and compare with their peers.

CELEBRATE ARIZONA: GEOLOGY OF THE SONORAN DESERT

Week 2

Science Concepts

Students will explore various ways to classify while extending their observations skills. They then will look at the physical, chemical and biological properties of the desert by continuing their exploration of field studies using soil and water samples.

Activity Sequence

- Geodes
- Plate Tectonics
- Volcanic Eruptions
- Literature Connection: GIS Mapping http://www.arcgis.com/home/webmap/viewer.html
- Watersheds & Topography

I Pad Applications

- Cloud Browse (to view Adobe Acrobat videos)
- Britannica Kids: Volcanoes
- ArcGIS
- MyGIS

Setting

Classroom & Outside

Time Frame

20 minutes - 1 hour per activity

Plan Ahead

- Pack STEM To Go bags
- Allow time for a snack (if provided)

To-Go

- Ice Balloons

ACTIVITY – Geodes

Background

Jr. Scientists will continue their exploration of Arizona rocks by looking at the physical properties of geodes. Geodes are rocks that have a cavity lined with crystals, which occur in sedimentary and certain volcanic rocks.
For information on how geodes are formed, go to: http://www.rocksandminerals4u.com/geodes.html.

Materials

- 6 hammers
- 25 STEM Notebooks
- 25 pencils
- 13 geodes
- 13 magnifiers
- 12 tape measures
- 25 goggles
- 25 Ziploc baggies, snack-sized

Investigation

1. Divide the Jr Scientists into pairs, and give each pair 1 geode, 1 tape measure and 1 magnifier. They will have to share the hammers amongst the pairs. SAFETY GOGGLES MUST ME WORN DURING THIS ACTIVITY.
2. Ask the Jr Scientists to investigate their geode using the magnifier and tape measure. ***What size is it (in metric units)? Is it heavy or light? What color is it? What does it feel like? Can you see any crystals on the outside?***
3. Next, instruct the Jr Scientists to place their geodes on the table, and hit the geode with the hammer until it breaks open.
4. Encourage the Jr Scientists to investigate the inside of the geode with the magnifier and tape measure. ***Is the inside completely hollow? Are there any crevices or pockets? What color is the inside? What do the crystals feel like? What size is the hollowed crevice in the center of the geode? How did it form?***
5. After they have drawn a diagram of their geode in their STEM notebook, give each Jr Scientist a Ziploc baggie. Each partner can take half of the geode home in the baggie.

ACTIVITY – Plate Tectonics (Source: *Geology of the Desert Southwest)*

Background

Plate tectonics is the theory that the outer layer of the earth is made of interconnected plates that are moving around. Together with heat from the sun, the powerful forces inside the earth shape every landscape and ecosystem on the surface of the earth. Volcanoes, mountains, valleys, earthquakes, and erosion all happen where they do because of the movement of the earth's plates.
Southern Arizona is the ideal place for the Saguaro Cacti to live, as

Arizona receives very little rain and cacti need a dry climate to survive. Most of the rain from the Pacific Ocean is blocked by the mountains along the California Coast. Mountains are created when two continental plates collide, and they both buckle upward. (Brown, Cynthia Light. *Geology of the Desert Southwest: Investigate How the Earth was Formed."* Chicago: Nomad Press, 2011. Pg. 5-9)

Northern Arizona's San Francisco Peaks Volcanic Field has 500 volcanoes and is on a tectonic hot spot. For information about Arizona Volcanoes see: http://vulcan.wr.usgs.gov/Volcanoes/Arizona/description_arizona_volcanoes.html.

Plate Tectonic Vocab (http://quizlet.com/4975/print/)

1.	**asthenosphere**	soft layer of the mantle
2.	**compression**	a squeezing force
3.	**continental drift**	theory that continents drift apart
4.	**convergent boundary**	boundary between two colliding plates
5.	**crust**	outermost layer of the Earth
6.	**divergent boundary**	boundary between two plates moving away from each other
7.	**fault**	a break in the Earth's crust
8.	**folding**	the bending of rock layers
9.	**inner core**	solid, dense center of the Earth
10.	**lithosphere**	outermost, rigid layer of the Earth
11.	**mantle**	layer between the crust and the core
12.	**outer core**	liquid layer of the Earth's core
13.	**sea-floor spreading**	new lithosphere is created here
14.	**subduction zone**	a region where a an oceanic plate sinks down into the athenosphere
15.	**tectonic plate**	piece of the lithosphere that moves on the asthenosphere
16.	**tension**	a pulling force
17.	**transform boundary**	boundary between two plates that are sliding past each other

Materials

- Picture Cards: Tectonic Plates & Arizona Landforms
- http://www.youtube.com/watch?v=Xui8J_WSvd0
- http://video.nationalgeographic.com/video/environment/environment-natural-disasters/volcanoes/volcano-lava/

- 1 bag of candy bars with 2 layers (Milky Way)
- 25 small plates
- 1 bag of solid chocolate candy bars
- 25 knives

Teacher Preparation

- Set up the projector & computer in the front of the classroom. Test the web links before the class comes in. Set out the picture cards for each group.

Investigation

1. Encourage the Jr Scientists to investigate the picture cards, and play the video clips (if technology is available).
2. Discuss plate tectonics and how this theory applies to the Sonoran Desert.
3. Distribute one of each candy bar, plate, and knife to each Jr Scientist.
4. Instruct the Jr Scientists to cut one end from the candy bar (just enough to see inside). This is the *cross-section* of the candy bar.
5. ***Discuss: How does this candy bar represent the earth? Which layer is the lithosphere? Which layer is the asthenosphere? Which is the crust?***
6. Using the knife, have the Jr Scientists make two or three cracks in the chocolate across the top middle part of the candy bar. The chocolate on each side of the cracks represents the different plates in the lithosphere. Grab the candy bar on each end and slowly pull it apart, about 1" or less (2.5cm). ***What does the gooey layer underneath do?*** This represents the *asthenosphere*, which is soft & stretches. The pulling apart represents a *divergent plate boundary*. During real rifting, though, the asthenosphere would well up with magma erupting at the surface.
7. Have the Jr Scientists push the layers back together, then push one side forward and pull the other side back. ***Do you feel resistance?*** This represents a *transform plate boundary.*
8. Lastly, take half of the layered candy bar in one hand, and the solid chocolate bar in the other hand. Push the two candy bars together, letting the solid chocolate bar go underneath the layered bar. This represents a *convergent boundary*. The solid chocolate bar is *oceanic lithosphere* which is thinner and denser, and the layered bar is *continental lithosphere*. The oceanic lithosphere *subducts* beneath the continental lithosphere.

ACTIVITY – Volcanic Eruptions

Background

Jr. Scientists will continue their exploration of Arizona geology by investigating volcanic eruptions and rock formation.
There are two volcanic fields in Arizona - San Francisco Peaks Volcanic Field (just north of Flagstaff) and Uinkaret Volcanic Field (located by Grand Canyon National Park).

For information on Arizona's volcanoes go to:
http://geopubs.wr.usgs.gov/fact-sheet/fs017-01/
http://www.volcano.si.edu/world/volcano.cfm?vnum=1209-01-
http://www.geology.sdsu.edu/how_volcanoes_work/
http://www.pdc.org/iweb/volcano.jsp?subg=1
http://volcanoes.usgs.gov/

Materials

- Picture Cards: Volcanoes
- 5 tall plastic water bottles
- 5 scissors
- 1 bottle hydrogen peroxide (1/2 cup per volcano)
- Yeast (1 tsp. per volcano)
- 1 bottle dishwashing Soap (few drops per volcano)
- 1 bottle Red Food Coloring (3-4 drops per volcano)
- Electric Kettle w/ warm water (2 tbs. per volcano)
- 1 Paper Towel Roll
- 1 Tablecloth roll
- 5 aluminum trays
- 20 Dixie cups
- 1 mixing bowl
- 5 spoons
- 5 measuring spoon sets
- 5 funnels
- 5 pipettes

Instructor Preparation

Fill the electric kettle and let the water get warm, but not hot. In the mixing bowl, mix the warm water and yeast. The mixture should be smooth, and you will be dividing this into 5 Dixie cups. Distribute the soap, food coloring, & peroxide into the Dixie cups (1 set for each per group).

Investigation

1. Divide the campers into groups of 5. Distribute the picture cards to each group. ***Discuss: What causes volcanic eruptions? What are the differences between explosive eruptions and slow eruptions? What are the pros and cons of each type of eruption? Are there any volcanoes in Arizona? Where? Do you know what chemicals can be used to imitate an explosive eruption?***

2. Distribute the supplies to each group. Explain that the water bottle is the volcano chamber, and they will need to create vents for the lava to ooze out of. The aluminum tray will go under the water bottle to catch the "lava" during the experiment.
3. Encourage the Jr Scientists to add the ingredients into their chamber. They need to record how much of each supply they are adding, and in which order they are added. (For the best eruption the "lava" ingredients need to be added in this order: hydrogen peroxide → soap → food coloring →yeast mix.)
4. Share out the results. ***Discuss: Was the reaction a slow eruption or an explosive eruption? What order of the addition of ingredients produced the slowest eruptions? Which produced the fastest? What would happen to the reaction if the water was cold? What would happen if it was hot? What would happen if more yeast was added? What other chemicals could be used to create a simulated volcanic eruption?***

ACTIVITY – Literature Connection & GIS Mapping

Background

Jr. Scientists will investigate Arizona's watersheds and how humans have adapted to and changed them to survive in the desert. During the "reading" connection Jr Scientists will explore the ESRI site to read and interpret maps and to then create their own. GIS (Geographic Information Systems) is a method of layering maps and information within maps to understand and make decisions based on relationships. The ESRI site provided a great deal of information on how GIS works and who uses it. Further expand the Jr Scientists understanding by encouraging them to create a 2-layer map of Arizona based on information they would like to see and the relationship between that information.

Materials

- "How Are Deserts Formed" on http://www.dbg.org/education-programs/digital-learning/for-students
- ESRI website http://www.arcgis.com/home/webmap/viewer.html
- 50 overhead transparency sheets with Arizona map imprinted on them http://alliance.la.asu.edu/maps/Arizona.pdf
- 25 Permanent markers in various colors
- Maps that Jr Scientists may find interesting to look at relationships between. See http://alliance.la.asu.edu/maps/maps.htm

Investigation

1. Explore the webmap viewer on the ESRI website as a group.
2. **Discuss:** ***What is GIS? (geographic information systems) How do we use it in daily life? Who uses it? How can GIS be useful? Looking at watersheds, what information would you like to see layered on an Arizona map? What relation might there be between watersheds and landforms? Dams and cities? Habitats and rivers, streams and lakes?***
3. Have Jr. Scientists sketch a GIS map using 2 transparency sheets. They may include one with watersheds and the other landforms, one with rivers and lakes and dams and the other watersheds, etc. As they become creative them may add habitats of Arizona animals, cities they've been to, etc. Walk around the room as they work asking questions; ensuring they understand GIS mapping and having them share ideas on information they would like to see the relationship between. **Discuss:** ***What information were you interested in comparing and/or looking for a relationship between? Did you see a relationship after building your GIS map? Why or why not? How can GIS mapping help us?***

ACTIVITY – Watersheds and Topography

Background

A watershed is an area or region where all of the water that is contained in it drains into a common place whether a river, basin or sea. A mountain often divides watersheds because water on either side of it will drain into separate areas or water systems. John Wesley Powell states that a watershed is "that area of land, a bounded hydrologic system, within which all living things are inextricably linked by their common water course and where, as humans settled, simple logic demanded that they become part of a community."

The topography of land tells us the elevation. Studying topography can help scientists and geographers understand the watersheds and thus the water sources that support various habitats.

Materials

- Various topographical maps including http://alliance.la.asu.edu/maps/AZTOPO.PDF
- 5 Arizona watershed maps http://alliance.la.asu.edu/maps/AZ_Watersheds_COLOR.pdf
- 2 packages of brown clay (used for pottery/kilns)
- 1 spool of string
- 25 blank maps of Arizona on cardstock http://alliance.la.asu.edu/maps/Arizona.pdf
- 5 Arizona landform maps http://alliance.la.asu.edu/maps/AZPHYSICAL.PDF
- 25 pieces of paper and pencils

Teacher Preparation

- Divide the clay into 5 sections for the 5 groups and cut a piece of string for each Jr Scientist
- Handout various maps to each group. Encourage them to explore the maps. Walk around and ask questions; facilitating inquiry.

Investigation

1. Let the Jr Scientists to explore the various maps. Encourage questions and investigations as to the information the maps tell us.
2. **Discuss:** ***What kinds of maps did you see? What did the maps tell us? How do you read topographical maps? Can you tell where the mountains are? Where the steep climbs would be versus the slow and steady climbs?*** Show the Jr Scientists how to read a topo map – looking specifically at the distance between each line and places where it would be steeper vs. a steady climb; describing incline in short vs. greater distances.
3. You are going to build a topographical or topo map. Each Jr Scientist should take a piece of clay and build a mountain.
4. Once done have them slice the mountain in at least 5 horizontal cuts using the string. Lay the largest piece on a piece of paper and trace it (remove when done). Lay the second largest piece on top of the paper and trace. Do so for all pieces until you have a topo map. Add a few features to your map for the reader to understand it: A title of your mountain map, a compass rose, and a key that gives the distance between each line.
5. Now have Jr scientists draw two hiking trails on their map – one that would be challenging and another that would be easy. Have them share out in groups. Walk around the room challenging their thoughts and ideas to ensure understanding the reading of topo maps.
6. Provide the watershed and landform maps of Arizona to each group. Discuss what a watershed is briefly and look and see how the two may be related.
7. Instruct the Jr Scientists that they will build a map of Arizona to identify the watersheds based on the topography of Arizona. They may work individually, in pairs or in groups as determined by the Jr Scientists. They may use the maps available to ensure their maps are as accurate as possible.
8. Once they have built their map ask them about the watersheds and landforms and how they are related. Have the Jr Scientists share out in their groups before the whole group discussion. Facilitate discussion based on landforms, watersheds, topography and habitats and how they are related.

9. **Discuss:** ***What watersheds were you able to build within your map? What landforms help structure or create those landforms? What drainage system is found within those systems? What role has humans played in those drainage systems? Have they altered them? How? Why?***

THE POWER OF THE SUN: SOLAR ENERGY

Week 3 – Understanding and using the sun's free gifts

The Science Behind The Activities	Jr. Scientists will see how the sun has had a huge impact on people from the past and people of today. They then will explore the power of the sun and will discover how to use the sun to make life easier for their future.
Activity Sequence	• Sun Tricks & Light Hockey • Literature Connection: Arrow To The Sun by Gerald McDermott • The Power of the Sun: Telling Time • Solar-Powered Toy
I Pad Applications	• Sun Seeker • 3D Sun
Setting	Classroom & Outside
Time Frame	20 minutes - 1 hour per activity
Plan Ahead	• Pack STEM To Go bags • Collect recyclable materials • Allow time for a snack (if provided)
To-Go	• UV Detector

ACTIVITY – Sun Tricks and Light Hockey

Background

Light is a form of radiant energy. It travels in a straight line unless something is in its path. If the object is clear the light will pass through it. When a material is transparent it transmits light and you can see through it. When a light reflects off of an object like a shiny surface, the light changes direction. Some objects absorb light. When this happens a change in temperature occurs because the light energy becomes heat energy. In this activity Jr Scientists will explore the idea of transmitting, reflecting and absorbing light and its effect on heating or cooling the object.

Materials

- 25 Mirrors
- 10 Clear plastic squares
- 10 Black squares
- 10 White paper squares
- 10 cardboard squares
- 10 Shiny metal squares
- 10 Coarse sandpaper squares
- Challenge Cards

Investigation

1. Take the groups outside and ask the Jr Scientists to explore how the sun behaves with the various materials. Migrate from group to group asking questions to facilitate investigations. **Warning:** Caution the Jr Scientists about the dangers of focusing sunlight directly into other's eyes.
2. **Discuss:** ***What happened with the sunlight using various materials? What happened when you combined materials or had materials work together? What materials were best in reflecting light? What materials absorbed light? What materials transmitted light? Did any materials absorb light and feel warmer? Why?***
3. Have Jr. Scientists organize their ideas and materials into items that transmit, reflect and absorb light. Give the groups challenges to accomplish certain tasks using the materials.
4. **Discuss:** ***Were you able to accomplish the tasks? Which tasks were easy? Hard? How did you measure success within a task? Did some materials work better than others to accomplish a task?*** Remind Jr Scientists that it is important for scientists to find what doesn't work as well as what does work.
5. **Light Hockey Challenge:** Jr Scientists will now use their knowledge to play Light Hockey. In groups they will grab 3 cards from the box/jar. If the card says **BLOCK** they must absorb light, if the card says **PASS** they must transmit light and if the card says **BOUNCE** they must reflect light. They will have to use all three cards they draw to get light from one "goal" to the other "goal" and then explain how they did it to

the group reinforcing the key concepts.

ACTIVITY – Literature Connection

Background

The sun has been worshiped and depicted in artwork from the beginning of man. Different cultures view the sun differently but all have shown their appreciation for what the sun offers mankind. Once you take the Jr Scientists to your reading area begin asking questions about what they know about the sun and how it was used by our ancestors and how we use it today.

Materials

- Arrow to the Sun by Gerald McDermott

Investigation

1. Have Jr Scientists sit down in your designated reading area. Discuss the power of our sun and how it was used by our ancestors. Discuss how the sun is used by animals and people today (energy, food, shelter).
2. Read the book, discussing along the way key ideas about the sun, solar energy, and how the sun is viewed and used. Discuss the colors that represent the sun and warmth versus cool in the artistic book.

ACTIVITY – What Time is it?

Background

Solar noon occurs when the sun is exactly in the south. In Phoenix, it occurs around 12:30pm. To find north, a Jr Scientist faces their shadow at solar noon. Depending on the season, this shadow will have different lengths. It will be shortest in the summer and longest in the winter. The shadow will fall in different directions at different times of the day. Jr Scientists will be the center or gnomon of a sundial and will explore how people of long ago and people of today use the sun to tell time. For more information see: http://www.sciencekidsathome.com/science_experiments/sundial-1.html , http://www.sunclocks.com/pics/fs-001.htm , http://tlc.howstuffworks.com/family/sunshine-activities2.htm

Materials

- 30 pieces of sidewalk chalk, various colors
- String
- Yard Stick
- Sundial templates & Pictures
- 5 Rolls scotch tape

Investigation

1. Take advantage of us much time as possible by coming back to

the sundial project every 15-20 minutes. As soon as the Jr Scientists arrive take them outside and have them face north and draw their shadow. They will need to work in pairs to accomplish this task. (Be sure to place a star or 'X' where the Jr Scientists are standing so that they stand in the same spot each time). Record the time in the head of the drawing.

2. After the first drawing, sit the Jr Scientists down in a shady area and discuss what they know about uses of the sun by people of long ago and people of today. When the topic of telling time comes up, discuss how a sundial works. Explain that today they will be using the sun to draw their own personal sundial. Have the Jr Scientists predict what is going to happen to their shadow as time passes.
3. Every 20 minutes have the Jr Scientists redraw their shadow and record their time; standing in the same spot each time. After each drawing have them regroup and ***discuss what is happening and have them explain why they think the shadows are moving in the way that they are. Ask what patters they are noticing and predict if the same patters would take place in the morning, in another state or country. Ask what they think may be a benefit for keeping time this way and what may be the drawbacks.***
4. After the last drawing (20 minutes before the end of Club), have the groups formulate a statement about the effect of time in relation to the change of the position of the sun. Share out.
5. While the groups are waiting in between the timed measurements for the sundial, have the groups work on their solar toys.
6. **Discuss:** ***What was the purpose of the sunclock? Where they as effective as our current technology? How could you use a sunclock and why might you want to use one? What were the challenges in building the sunclock? Is there a better time of day to build one?***

ACTIVITY – Solar-Powered Toys

Background

Solar energy is the sun's rays that reach the Earth. This energy can be converted into heat and electricity. When converted into heat, such as in a solar oven, you can boil water and cook food.
Solar energy can be converted into electricity two ways: Solar Thermal Power Plants and Photovoltaic (PV) or "solar cells". Solar cells change sunlight directly into electricity and are used in solar calculators and in power plants. In this activity Jr Scientists will explore a solar cell and how it works by creating a toy using recyclable materials, a solar panel and a DC motor.

Materials

- 2-3 solar-powered toys (cricket, car, etc.)
- 10 Solar Panels (Jr Scientists don't keep these)
- 10 DC Motors 2V 145mA (Jr Scientists don't keep these)
- 5 rolls Electrical Tape
- Miscellaneous recyclables: water bottles, small containers, etc.

Investigation

1. Jr. Scientists will observe a few solar-powered toys and familiar items to see how solar energy can be converted into powering a product. They then will brainstorm as a group how to create a toy or product using a solar cell. Brainstormed ideas will be listed on the board for all to share.
2. Jr Scientists will sketch their design in their notebooks and then will begin building their toy. Move around the room assisting Jr Scientists with logistics in creating their toys but be sure to allow them to build on their own, and make their own mistakes to then reassess and build a better-run toy.
3. **Discuss:** ***What did you build? (*****have Jr Scientists demonstrate their toy and explain their idea and process).** ***How does it use solar energy to power the toy? What plans did you have and how did you have to modify to make the toy work?***

FOOD FOR THOUGHT: DESERT PLANTS

Week 4 – Spines, Thorns and Leaves "Oh My!"

The Science Behind The Activities

Jr. Scientists will explore how scientists use classification to understand the diversity in plant life. They then will discover how cacti have adapted to the environment to survive the harsh reality of life in the Sonoran desert.

Activity Sequence

- Silly Science
- Literature Connection: Cactus Hotel by Guiberson
- Cactus Homes
- Seed Classification & Hitch a Ride

I Pad Applications

- Landscaper's Companion
- Leaf Snap

Setting

Classroom & Outside

Time Frame

20 minutes - 1 hour per activity

Plan Ahead

- Pack STEM To Go bags
- Allow time for a snack (if provided)
- Purchase items (produce) for Hitching a Ride activity
- Collect items for Hitching a Ride activity
- Allot space for Cacti

To-Go

- Grow a Desert Cactus

ACTIVITY – Silly Science Adapted from T.Trimpe, Havana Junior High, Havana, IL

Background

A dichotomous key is a tool scientists use to identify lots of similar objects. Dichotomous keys are available for a wide range of items from trees to insects and from fish to minerals. The engage activity will introduce dichotomous keys with silly names. Encourage Jr Scientists to create their own dichotomous key with objects they are familiar with like Pokémon cards, rocks and gems, writing tools or shoes. To learn more see:
http://sciencespot.net/Pages/classgen.html#Anchor-sillysci

Materials

- 25 STEM Notebooks
- 25 Pencils
- 5 white or clear marbles, 5 colored marbles
- 5 unsharpened pencils, 5 sharpened pencils
- 5 large paperclips, 5 small paperclips
- 5 pieces of white chalk
- 5 erasers
- 5 craft sticks
- 5 dice

Teacher Preparation

- Set out materials and the chart on each group as the Jr Scientists walk in. Walk around the room encouraging students to identify the materials based on the key. If they have time, have them create their own Silly Science Dichotomous Key with items familiar to them.

Investigation

1. As the Jr Scientists walk into STEM Club have the Silly Science materials and key at each table. Encourage the groups to discover the "silly name" of each item. Once they have had a taste of a dichotomous key, have them create their own using familiar items or items found in the room. If time, they can switch groups and discover each other's silly word clues based on a dichotomous key.
2. **Discuss:** ***What were the silly names of the objects? What was easy/difficult about discovering the silly names? Why would scientists use dichotomous keys? What benefit would they have for objects you are unfamiliar with? What was easy/difficult in creating your own dichotomous key?***

ACTIVITY – Literature Connection

Background

Have Jr Scientists go to the reading area for the weekly literature connection. Discuss their knowledge on the Desert Web as it relates to a Saguaro. Ask questions on how a saguaro grows? Where it grows? And how it might reproduce?

Materials

- Cactus Hotel by Brenda Guiberson

Investigation

1. Jr. Scientists should share out their knowledge of the Desert web as it relates to the Saguaro and any information they may know about the Saguaro cactus.
2. Read the book, Cactus Hotel by Brenda Guiberson. As you are reading, have students comment about the pictures and what is going on in the story.
1. **Discuss:** ***How is the Saguaro an integral part of the Sonoran Desert? What roles does the Saguaro play? How does the Saguaro reproduce? What environment does the Saguaro need to survive? Who depends on the saguaro for survival? What adaptations does the cactus have to survive in the Sonoran Desert? Why does a cactus like the saguaro have spines?***

ACTIVITY – Cactus Clues and Pleats

Background

Different species of cactus have specific identifying traits. Often people use the term succulent for a cactus. A succulent is a plant that is capable of storing water over long, dry periods. A cactus is a succulent and more. It has spines, small round areas called areoles, and more. A great phrase to remember: All cacti are succulents but not all succulents are cacti.

There are many different types of cacti but many have common features. Jr Scientists will investigate, organize and classify different cacti while observing what makes them each unique.

One popular cactus found in the Sonoran Desert is the Saguaro. A trait the saguaro has is that it can collect and store a great deal of water because of its root system, its internal porous body and its pleats which allows it to swell when water is available to hold more water. Jr Scientists will investigate the role of the pleats in addition to other features that make cacti so interesting to study.

Plants and animals over time have developed structures than enable them to live in certain environments. The cactus spine, though it can prick and hurt a human, has many functions that protect the cactus from predators and provide shade. The light color of the spine helps reflect sunlight and the combination of the many spines

provide shade for the cactus.
Water is an essential element to all plant life and the cactus is a great example of adaptations to environments. The low amount of rainfall that occurs in the desert requires the cactus to absorb as much water as it can when it does rain, and to store rain for long periods of time. The spines on the cactus guide the water down the outside, through the grooves, and towards the base of the plant to the shallow roots where it is absorbed and can be stored.
In addition to the spines providing protection for the cactus, they also provide protection from predators for the small animals and birds who build their home in cacti.

Materials

- 5-10 cacti samples in separate pots (including pleated cacti)
- 5-10 pictures of cacti (including saguaro)
- Box of toothpicks
- 5 magnifiers
- 25 Styrofoam cups
- Green Straws
- 5 green crayons
- Roll of bubble wrap
- 5 packages of scotch tape
- 5 Sponges
- 25 pipe cleaners
- Paper Towel & Toilet Paper tubes
- 1 roll of string
- Clay
- 1 pack of colored tissue paper
- 5 plastic knives
- 1 butter knife
- 5 pair of rubber gloves
- 5 Flashlight & batteries

Investigation

1. Jr Scientists will explore a variety of cacti – observing and classifying based on physical characteristics. Move around from group to group asking questions to facilitate inquiry. Jr Scientists may take the cacti out of the pot if they would like to look at the root system. CAUTION – remind Jr Scientists that spines can penetrate the skin so to use gloves if attempting to touch.
2. **Discuss:** ***What different kinds of cacti did you observe? What made each one unique? What do we now know about cacti and similar traits based on observation? What are cacti used for? What are adaptations cacti utilize for survival? How do cacti protect themselves from the hot sun? From being eaten by animals? From droughts and floods? From frost? How do cacti provide shade? Reduce water loss? Why do they***

grow so easily in arid climates?

3. Now have the Jr Scientists specifically look at a saguaro or pleated cactus. What is the purpose of the pleats? What is the purpose of the spines?
4. In groups have Jr Scientists brainstorm 10 reasons why a cactus has spines. As they brainstorm their list have them observe the cacti closely and record 5 things that describe a cactus spine. How could these things help a cactus survive? How are these 5 things useful in the desert?
5. Encourage Jr Scientists to further their investigation by conducting a few tests and further their observations:
    - Explore the cactus in direct sunlight and in artificial light.
    - Go in a dark area and observe the cactus with a flashlight.
    - Give a thermometer and have them test temperatures in various parts of the cactus and soil.
    - Slowly drop water on the cactus and observe what happens.
6. **Discuss:** ***What are 10 reasons why a cactus has spines?*** Give the Jr Scientists to bring together their ideas and share out the benefits of spines and how cacti use them to survive the desert. Discuss other adaptations of cactus and desert plants.
7. ***Continue your discussion on what would a Super cactus look like? One that could survive any desert environment or predator?*** Create a list of adaptations that are must-haves if you were a cactus living in the desert.
8. Share with the groups the various supplies available for them to build a super cactus. Have them brainstorm their plans first and then come and get supplies as needed to build a cactus that has adapted to survive the Sonoran Desert during even the hottest summers or coldest winters, the longest drought or the hungriest predators who find the cactus to look like a yummy dinner. As the Jr Scientists are designing and building, ask questions as to their choices in adaptations and how they work – really requiring a thoughtful plan of strong adaptations that would equal survival.
9. **As they finish, have them share out and discuss:** ***What features or adaptations does your cactus have that would mean survival in the Sonoran Desert? Why did you select those features? How did you modify those features to make the plant a super cactus?***

ACTIVITY – Hitching a Ride

Background

Most plants produce seeds which grow into new plants. In order to survive and develop into adults, seedlings require minerals, air,

water and energy in the form of sunlight. A seed is a new plant waiting for the right conditions to grow and come in all different sizes and shapes. Some seeds come in pods while others come inside fruit. All seeds are alike in two ways: They contain food that allows the little new plant to sprout and all are capable of generating a new organism.
Seeds can disperse in a variety of ways. They can be carried by an animal, be blown by the wind, float on water, or use a mechanism that catapults them away (desert sage). Wildlife make an important contribution to the effort. Seeds can hitchhike a ride on fur, can be dropped from a birds mouth or can be eaten and then dropped after passing through a digestive track.

Materials

- 5 apples/oranges*
- 5 peanuts*
- 5 grapes*
- 5 mesquite pods
- 5 green beans*
- 5 ears of corn*
- 5 barrel cactus or saguaro fruit*
- 5 desert grass stalk*
- 5 dandelions or creosote*
- 5 yucca pods or desert sage*
- 5 weeds*
- 25 Plastic knives
- 5 magnifiers
- 25 socks
- 25 snack sized Ziploc baggies
- Tablecloth

  * Instructors collect or purchase from store

Investigation

1. Give each group a set of plants. Provide time for the Jr Scientists to examine the plants & separate the seeds using knives, magnifiers and other senses. Encourage groups to create a dichotomous key with the seeds. Encourage groups to classify the seeds based on physical appearance, the types of seeds they are and/or the way in which the seeds may be dispersed. Have the Jr Scientists take pictures of their varying organizational procedures as they investigate the seeds.
2. **Discuss:** ***What types of seeds were there? What form did they come in? What did they look like inside? How did you classify them? Organize them? What did you discover about the seeds? What makes a seed a seed? What plants did the seeds come from? What do you know about those plants?***
3. Take the Jr Scientists outside and explore how seeds disperse.

Give one sock to each Jr Scientist. Have them put the sock on over his/her shoe and walk around the campus, particularly near plants/bushes, etc. You can also walk through grass/weeds. If no landscaping is available you may want to consider doing this exercise prior to STEM Club and bring in the results of your walk. Have Jr Scientists blow dandelions and watch where the seeds fall. Observe where seeds may be on the school grounds and discuss how they got there. Open pods and find a place to leave seeds until the next camp. (They can come back and observe which seeds are still there and which ones have left either by animal, wind or water).

4. Encourage Jr Scientists to take their socks home with them and to plant in their yards.
5. **Discuss:** ***How do seeds disperse? Why is it necessary to for seeds to disperse? What are factors in whether a plant reproduces near the mother plant? A seed they may not be able to visualize is one that catapults (desert sage, red yucca). Why do you think different seeds tend to travel in different ways? Who else in the desert web is involved? What natural elements are involved? How do seeds play a part in habitat?***

LIVING THINGS: DESERT BIRDS

Week 5 – Desert Survival for Birds 101

The Science Behind The Activities	The Sonoran Desert is home to more than 350 bird species. Jr. Scientists will explore how these birds survive in the desert through observation and exploration of beak adaptations.
Activity Sequence	• Cactus Nest • Literature Connection: Bird Identification & Songs http://www.allaboutbirds.org/guide/search • Bird Beaks • Owl Pellet Dissection • If the Nest Fits (Cultural Sensitivity Substitute)
I Pad Applications	• myNaturalist • The Sibley eGuide to Birds of America
Setting	Classroom & Outside
Time Frame	20 minutes - 1 hour per activity
Plan Ahead	• Pack STEM To Go bags • Allow time for a snack (if provided)
To-Go	• Milk Carton Bird Feeder

ACTIVITY – Cactus Nests

Background

Jr. Scientists will determine why the Saguaro Cactus is utilized as a shelter by desert birds.
Saguaro cacti are host to a great variety of animals. The gilded flicker and Gila woodpecker excavate nest cavities inside the saguaro's pulpy flesh. When a woodpecker abandons a cavity, elf owls, screech owls, purple martins, finches and sparrows may move in. For more information about the Saguaro Cactus go to: http://www.nps.gov/sagu/planyourvisit/upload/the%20saguaro%20cactus.pdf.

If technology is available, instructors can show the following clip as an introduction to the activity: http://pbskids.org/dragonflytv/show/cactus.html.

Materials

- 1 outdoor thermometer
- 25 STEM notebooks
- 25 pencils
- 20 Styrofoam Cups
- 20 small Styrofoam plates
- 5 drawing compasses
- 5 compasses
- 5 thermometers
- 5 scissors
- 5 rolls Scotch tape
- 5 rolls duct tape
- Picture Cards: Cactus Nests
- Optional: small rocks gathered from outside

Investigation

1. Pass out STEM notebooks and pencils. Divide Jr Scientists into groups of five. Distribute 4 Styrofoam cups & plates, 1 drawing compass, 1 compass, 1 thermometer, 1 pair of scissors, 1 roll of scotch tape, and 1 roll of duct tape to each group.
2. Inform the Jr Scientists that they will be building 4 "cactus nests" out of the cups and plates. They will need a hole in one side of the cup for the birds to enter (all the holes will need to be the same size) and the plate will be the lid.
3. Each group will then need to take the temperature of each nest, and record it in their STEM notebooks.
4. Take the Jr Scientists outside, and instruct the groups to place their "cactus nests" at least 5 feet off the ground in a sunny location. Using the compass, they will need to turn the nests so that they are each facing a different direction (the front of the nest is where the hole is). Make sure that the nests are secured, either by taping them down or placing rocks on the inside of the

nest.

5. Take a reading from the outdoor thermometer, and have the Jr Scientists record it in their STEM notebooks.
6. Every 20 minutes take the Jr Scientists outside to record the temperature of their nests. They will also need to record the outdoor temperature each time they go outside.
7. ***After the last reading, discuss: Was the temperature inside the nests the same as the temperature outside? Was it higher or lower than the temperature outside? Why? Did the temperatures increase in the nests throughout the experiment, or did they stay the same? Why do we see these results? Which nest was the coolest in temperature? Which was the hottest? Did the location of the nests affect the temperature?***

ACTIVITY – Literature Connection

Background

Jr. Scientists will continue to discuss animal features and adaptations as they look at birds that live in Arizona.

Materials

- http://www.allaboutbirds.org/guide/search

Investigation

1. Explore the website as a group. Search for the following birds that are native to Arizona: Cactus Wren, Harris Hawk, Arizona Woodpecker, Canada Goose, Scaled Quail, Gambel's Quail, Ring-necked pheasant, Great Blue Heron, Black-crowned Night Heron, Turkey Vulture, Harris' Hawk, Mourning Dove, Burrowing Owl, and Anna's Hummingbird. Listen to their calls, notice what areas they are native to, and determine what they eat.
2. **Discuss:** ***What adaptations do they have that allow for them to survive in the desert? Where do they live in Arizona? What type of habitat/nest do they live in? What do they eat? What time of the day are they active? What do their beaks look like? How does their beak help them eat that food? Do you think it prohibits them from eating other foods? Do they reside year-round in the desert, or do they migrate to another area for part of the year? Which bird adapts best to the desert?***
3. Another good website to explore is : http://askabiologist.asu.edu/activities/birds.

ACTIVITY – Bird Beaks

Background

Human hands are very important tools for gathering food, eating, sensing the environment and protecting from danger. One structure that makes the hand so important is the opposable thumb. Many

animals do without the convenience of hands but have grasping capabilities in their feet. Birds have the beak, a unique tool for obtaining food and water.
Bird beaks are important multi-functional devices used to weave nests, defend territory, attack competitors, groom feathers, communicate, and most significantly, to gather or capture food. The beak is often adapted to a specialized habitat. For example, a duck bill is good for scooping fish from a stream but is useless for sucking nectar out of flowers in a desert environment.
A bird's beak is made of keratin, the same material found in human fingernails. Just as humans' nails are constantly growing and renewed, so are beaks when they wear away or are damaged.

Materials

- 60 seed pods
- 60 dry macaroni
- 60 raisins
- 60 foam popcorn
- 10 thick leaves
- Small bag of rice grain or bird seed
- 2oz or 3oz cups (nectar)
- 1 pack index cards
- 30 sandwich bags
- 30 Styrofoam cups
- 5 plastic deli container
- 1 large tub (1-2 gallon size approx.)
- 5 spring clothes pins
- 30 popsicle sticks
- 5 pair of scissors
- 5 toothpicks
- 5 straws
- 5 tweezers
- 5 food prongs
- 5 spoons
- 1 box of rice cereal or similar cereal
- Picture Cards: Birds

Teacher Preparation

- Set out cups of cereal and popsicle sticks (1 per person) at each table. Instruct the Jr Scientists to eat the cereal with the popsicle sticks. They cannot use their hands other than to hold the popsicle sticks. As you walk around the room ask about difficulties and what would make it easier. After a time allow them to use fingers but no thumbs.

Investigation

1. Allow the Jr Scientists to explore eating cereal first with only a popsicle stick and no hands and second with only fingers (no

thumbs).

2. **Discuss:** ***Ask questions as to how they can eat using only the tools provided? What would make it easier? Would they eat this food if they had a choice given the tools they have to eat? What foods would be better to eat using these tools (popsicle sticks and fingers only)? How many rice crispy cereal pieces were you able to eat? Why? What was challenging? What would make it easier? If you only had these tools, what foods would be easier to eat? How does this exercise relate to birds and how they eat? What beak differences do you find among bird species? Do you think it makes a difference in the foods they eat?***
3. Look at the various pictures of Arizona birds. Based on their beaks discuss what they might eat (meat, seeds, nectar). Tell the Jr Scientists that they are going to pretend that they are birds and will navigate various beaks to pick up various "food" items (snails, bugs, worms and nectar will be represented with marbles, raisins, macaroni and water, etc.)
4. Using the various tools to represent beaks try picking up the "food" and determine which "beak" picks up which food items.
5. **MINI DISCUSSION**: A hummingbird's beak protects its long tubular tongue which the bird uses to extract nectar from flowers. Eagles and other raptors have strong, hooked beaks for tearing flesh. Woodpeckers have chisel-like beaks for searching inside trees for insects. Some birds have short cone-shaped beaks for cracking open seeds, and others have long beaks for probing mud and water to find worms and insects.
6. **Discuss:** ***Which bird beak picks up which foods? How have the various adaptations helped the bird species' adapt and survive in the desert? What food sources are available in the desert?***

ACTIVITY – Owl Pellet Dissection

Background

Owls have adapted both physically and behaviorally to survive in their environment. By looking at what they eat we are better able to understand their role in nature.

Materials

- 25 owl pellets
- 25 tweezers
- 1 box toothpicks
- Owl pellet chart
- 5 bottles of glue
- 25 pieces of cardstock
- Tablecloth
- Gloves

Investigation

1. Instruct Jr Scientists that they will be dissecting owl pellets to learn more about what they eat and how they survive in their environment. The owl pellets have been sterilized so are free from bacteria and diseases.
2. Jr Scientists will each receive their own owl pellet and owl pellet chart. They may use their fingers, toothpicks or tweezers to carefully dissect and discover what they may find in the pellet. Walk around the room asking questions about what they find, what animal they think they are finding in the pellet, what habitat the owl may have lived in and how they hunt and capture their prey. They should closely examine each bone they discover to identify what animal species they come from (using the chart).
3. The Jr Scientists may then begin creating a skeleton; gluing the bones onto a piece of cardstock.
   Discuss: ***What did you discover in the owl pellet? What bones were discovered? What animals did they come from? How do owls hunt for their prey? How do they capture, eat and digest their food? What do we know about their habitat? What can we learn from dissecting owl pellets? Were there any surprising finds? What questions do you still have? How can we find out more?***

ACTIVITY– If the Nest Fits (Cultural Sensitivity Substitute)

Background

Besides food and water, animals need shelter to survive. Whether it's a nest, a cave, or a hole in the ground, this shelter is its home and must shield the animal form the weather and from predators. Animals build their shelters from the materials in their environment. Because they can't hire a licensed contractor, they must use their own appendages (beaks) to transport and incorporate materials into a form that can serve as their home. The tools used to build the shelter are specific to the animal and to the type of home in which it lives. For example, a snake cannot build a bird's nest in a cactus nor can an eagle fit into a coyote den.

The cactus wren builds a nest of twigs and other found items in the shape of a hollow ball within a cholla cactus. A swallow builds a hollow mound of mud balls as its home. Birds use their beaks to build their nests. They pick up small pieces of material and carry it to their site.

A nest can also be a collection of material on the ground using a plant such as a cactus for protection. For example, the pack rat hides the entrance to its home under a network of sticks, cactus chunks, and collected trash all cemented with urine. Each piece was picked up with its paws and carried in its mouth.

Materials

- An abandoned nest (if found near your site) or a picture of one.

- Various bird and nest pictures
- 25 spoons
- 1 box of toothpicks
- 5 pliers
- 5 tweezers
- 5 tongs
- 5 popsicle sticks
- 5 skewers
- 5 pipettes & Styrofoam cups
- Fresh and dried grass, weeds, sticks
- Pieces of string
- Strips of material/paper
- 1 bag of soil
- 25 Ziplocs
- 5 Styrofoam cups (to collect water as needed)
- Plastic egg with rock inside
- Spray bottle
- Fan
- 5 Thermometers

Teacher Preparation

Scope out a good place to take the Jr Scientists on a nature walk to collect items for their nest.

Investigation

1. Take a nature trip around the school and look for nests, birds, and places birds may call home. Tell the Jr Scientists that they will be playing the role of a bird in the desert. Each person will be building a nest. While on the walk they may collect items for their nest.
2. **Discuss:** ***What birds or nests did you see? Where might birds live near the school? Have you ever seen a nest? What kinds of nests do various birds build? What kinds of materials do they use to build their nest? What items did you collect? Why did you select those items?*** Look at the various pictures of nests and discuss what they are made of, where they are located, what birds build them, etc. ***What tools do birds have to collect and build their nests? What different kinds of beaks do various birds have? How might they be used to collect and build nests? What tools do we use to build our homes? How are they similar or different?***
3. Each Jr Scientist will play the role of the bird to build their nest. Because birds do not have hands with thumbs, the Jr Scientists must select one tool they would like to use to build their nest (tools should be set out with the available materials for easy access). Once they select their tool they may not switch nor use their hands to build their nest.
4. Jr Scientists may now begin collecting additional materials and

taking out their collected materials to build their nest – using only the tool they selected as their "beak". They cannot use their hands at any time.

5. As they build their nest walk around the room and ask where their nest is located, what kind of animal would live in it and how its inhabitant would enter the nest?
6. After they build their nest, test the nest –
   - Add weight to the nest to represent the bird they selected – will the nest support the extra weight when lifted without supporting the center?
   - Direct a fan over it and spray the nest – will it survive rain and wind?
   - Measure the nest temperature inside and out – will it protect the bird from heat and cold?
7. Jr Scientists may modify and/or rebuild to test again. They may also research the weight of their bird and where the nest would be located if needed to better test the nest and its environment.
8. **Discuss:** ***What was challenging in building the nests? What bird did you select and how did that change how you built the nest? What did you learn from testing the nest? What changes did you have to make to ensure the bird had a nest that protected it from the environment? Where would that bird's nest be located? How does the bird protect itself while in the nest from predators? What basic needs should every nest provide for the animal that lives there?*** The cactus wren's nest is shaped like a hollow ball with a single opening. This is a good example of meeting the basic needs by protecting it from the sun and by being located in the branches of a cholla cactus it protects it from predators.
9. Create a chart that details the tools needed to create the nests and the types of birds that may build that kind of nest. The group may include location, types of materials used to build the nest, environmental issues, elements to protect, etc. They may include the tools or draw pictures of the tools needed and the picture cards of the various birds and nests.

LIVING THINGS: DESERT BIRDS

Week 5 – Desert Survival for Birds 101

The Science Behind The Activities	The Sonoran Desert is home to more than 350 bird species. Jr. Scientists will explore how these birds survive in the desert through observation and exploration of beak adaptations.
Activity Sequence	• Cactus Nest • Literature Connection: Bird Identification & Songs http://www.allaboutbirds.org/guide/search • Bird Beaks • Owl Pellet Dissection • If the Nest Fits (Cultural Sensitivity Substitute)
I Pad Applications	• myNaturalist • The Sibley eGuide to Birds of America
Setting	Classroom & Outside
Time Frame	20 minutes - 1 hour per activity
Plan Ahead	• Pack STEM To Go bags • Allow time for a snack (if provided)
To-Go	• Milk Carton Bird Feeder

ACTIVITY – Cactus Nests

Background

Jr. Scientists will determine why the Saguaro Cactus is utilized as a shelter by desert birds.
Saguaro cacti are host to a great variety of animals. The gilded flicker and Gila woodpecker excavate nest cavities inside the saguaro's pulpy flesh. When a woodpecker abandons a cavity, elf owls, screech owls, purple martins, finches and sparrows may move in. For more information about the Saguaro Cactus go to: http://www.nps.gov/sagu/planyourvisit/upload/the%20saguaro%20cactus.pdf.

If technology is available, instructors can show the following clip as an introduction to the activity: http://pbskids.org/dragonflytv/show/cactus.html.

Materials

- 1 outdoor thermometer
- 25 STEM notebooks
- 25 pencils
- 20 Styrofoam Cups
- 20 small Styrofoam plates
- 5 drawing compasses
- 5 compasses
- 5 thermometers
- 5 scissors
- 5 rolls Scotch tape
- 5 rolls duct tape
- Picture Cards: Cactus Nests
- Optional: small rocks gathered from outside

Investigation

1. Pass out STEM notebooks and pencils. Divide Jr Scientists into groups of five. Distribute 4 Styrofoam cups & plates, 1 drawing compass, 1 compass, 1 thermometer, 1 pair of scissors, 1 roll of scotch tape, and 1 roll of duct tape to each group.
2. Inform the Jr Scientists that they will be building 4 "cactus nests" out of the cups and plates. They will need a hole in one side of the cup for the birds to enter (all the holes will need to be the same size) and the plate will be the lid.
3. Each group will then need to take the temperature of each nest, and record it in their STEM notebooks.
4. Take the Jr Scientists outside, and instruct the groups to place their "cactus nests" at least 5 feet off the ground in a sunny location. Using the compass, they will need to turn the nests so that they are each facing a different direction (the front of the nest is where the hole is). Make sure that the nests are secured, either by taping them down or placing rocks on the inside of the

nest.

5. Take a reading from the outdoor thermometer, and have the Jr Scientists record it in their STEM notebooks.
6. Every 20 minutes take the Jr Scientists outside to record the temperature of their nests. They will also need to record the outdoor temperature each time they go outside.
7. ***After the last reading, discuss: Was the temperature inside the nests the same as the temperature outside? Was it higher or lower than the temperature outside? Why? Did the temperatures increase in the nests throughout the experiment, or did they stay the same? Why do we see these results? Which nest was the coolest in temperature? Which was the hottest? Did the location of the nests affect the temperature?***

ACTIVITY – Literature Connection

Background

Jr. Scientists will continue to discuss animal features and adaptations as they look at birds that live in Arizona.

Materials

- http://www.allaboutbirds.org/guide/search

Investigation

1. Explore the website as a group. Search for the following birds that are native to Arizona: Cactus Wren, Harris Hawk, Arizona Woodpecker, Canada Goose, Scaled Quail, Gambel's Quail, Ring-necked pheasant, Great Blue Heron, Black-crowned Night Heron, Turkey Vulture, Harris' Hawk, Mourning Dove, Burrowing Owl, and Anna's Hummingbird. Listen to their calls, notice what areas they are native to, and determine what they eat.
2. **Discuss:** ***What adaptations do they have that allow for them to survive in the desert? Where do they live in Arizona? What type of habitat/nest do they live in? What do they eat? What time of the day are they active? What do their beaks look like? How does their beak help them eat that food? Do you think it prohibits them from eating other foods? Do they reside year-round in the desert, or do they migrate to another area for part of the year? Which bird adapts best to the desert?***
3. Another good website to explore is : http://askabiologist.asu.edu/activities/birds.

ACTIVITY – Bird Beaks

Background

Human hands are very important tools for gathering food, eating, sensing the environment and protecting from danger. One structure that makes the hand so important is the opposable thumb. Many

animals do without the convenience of hands but have grasping capabilities in their feet. Birds have the beak, a unique tool for obtaining food and water.
Bird beaks are important multi-functional devices used to weave nests, defend territory, attack competitors, groom feathers, communicate, and most significantly, to gather or capture food. The beak is often adapted to a specialized habitat. For example, a duck bill is good for scooping fish from a stream but is useless for sucking nectar out of flowers in a desert environment.
A bird's beak is made of keratin, the same material found in human fingernails. Just as humans' nails are constantly growing and renewed, so are beaks when they wear away or are damaged.

Materials

- 60 seed pods
- 60 dry macaroni
- 60 raisins
- 60 foam popcorn
- 10 thick leaves
- Small bag of rice grain or bird seed
- 2oz or 3oz cups (nectar)
- 1 pack index cards
- 30 sandwich bags
- 30 Styrofoam cups
- 5 plastic deli container
- 1 large tub (1-2 gallon size approx.)
- 5 spring clothes pins
- 30 popsicle sticks
- 5 pair of scissors
- 5 toothpicks
- 5 straws
- 5 tweezers
- 5 food prongs
- 5 spoons
- 1 box of rice cereal or similar cereal
- Picture Cards: Birds

Teacher Preparation

- Set out cups of cereal and popsicle sticks (1 per person) at each table. Instruct the Jr Scientists to eat the cereal with the popsicle sticks. They cannot use their hands other than to hold the popsicle sticks. As you walk around the room ask about difficulties and what would make it easier. After a time allow them to use fingers but no thumbs.

Investigation

1. Allow the Jr Scientists to explore eating cereal first with only a popsicle stick and no hands and second with only fingers (no

thumbs).

2. **Discuss:** ***Ask questions as to how they can eat using only the tools provided? What would make it easier? Would they eat this food if they had a choice given the tools they have to eat? What foods would be better to eat using these tools (popsicle sticks and fingers only)? How many rice crispy cereal pieces were you able to eat? Why? What was challenging? What would make it easier? If you only had these tools, what foods would be easier to eat? How does this exercise relate to birds and how they eat? What beak differences do you find among bird species? Do you think it makes a difference in the foods they eat?***
3. Look at the various pictures of Arizona birds. Based on their beaks discuss what they might eat (meat, seeds, nectar). Tell the Jr Scientists that they are going to pretend that they are birds and will navigate various beaks to pick up various "food" items (snails, bugs, worms and nectar will be represented with marbles, raisins, macaroni and water, etc.)
4. Using the various tools to represent beaks try picking up the "food" and determine which "beak" picks up which food items.
5. **MINI DISCUSSION**: A hummingbird's beak protects its long tubular tongue which the bird uses to extract nectar from flowers. Eagles and other raptors have strong, hooked beaks for tearing flesh. Woodpeckers have chisel-like beaks for searching inside trees for insects. Some birds have short cone-shaped beaks for cracking open seeds, and others have long beaks for probing mud and water to find worms and insects.
6. **Discuss:** ***Which bird beak picks up which foods? How have the various adaptations helped the bird species' adapt and survive in the desert? What food sources are available in the desert?***

ACTIVITY – Owl Pellet Dissection

Background

Owls have adapted both physically and behaviorally to survive in their environment. By looking at what they eat we are better able to understand their role in nature.

Materials

- 25 owl pellets
- 25 tweezers
- 1 box toothpicks
- Owl pellet chart
- 5 bottles of glue
- 25 pieces of cardstock
- Tablecloth
- Gloves

Investigation

1. Instruct Jr Scientists that they will be dissecting owl pellets to learn more about what they eat and how they survive in their environment. The owl pellets have been sterilized so are free from bacteria and diseases.
2. Jr Scientists will each receive their own owl pellet and owl pellet chart. They may use their fingers, toothpicks or tweezers to carefully dissect and discover what they may find in the pellet. Walk around the room asking questions about what they find, what animal they think they are finding in the pellet, what habitat the owl may have lived in and how they hunt and capture their prey. They should closely examine each bone they discover to identify what animal species they come from (using the chart).
3. The Jr Scientists may then begin creating a skeleton; gluing the bones onto a piece of cardstock.
   Discuss: ***What did you discover in the owl pellet? What bones were discovered? What animals did they come from? How do owls hunt for their prey? How do they capture, eat and digest their food? What do we know about their habitat? What can we learn from dissecting owl pellets? Were there any surprising finds? What questions do you still have? How can we find out more?***

ACTIVITY– If the Nest Fits (Cultural Sensitivity Substitute)

Background

Besides food and water, animals need shelter to survive. Whether it's a nest, a cave, or a hole in the ground, this shelter is its home and must shield the animal form the weather and from predators. Animals build their shelters from the materials in their environment. Because they can't hire a licensed contractor, they must use their own appendages (beaks) to transport and incorporate materials into a form that can serve as their home. The tools used to build the shelter are specific to the animal and to the type of home in which it lives. For example, a snake cannot build a bird's nest in a cactus nor can an eagle fit into a coyote den.

The cactus wren builds a nest of twigs and other found items in the shape of a hollow ball within a cholla cactus. A swallow builds a hollow mound of mud balls as its home. Birds use their beaks to build their nests. They pick up small pieces of material and carry it to their site.

A nest can also be a collection of material on the ground using a plant such as a cactus for protection. For example, the pack rat hides the entrance to its home under a network of sticks, cactus chunks, and collected trash all cemented with urine. Each piece was picked up with its paws and carried in its mouth.

Materials

- An abandoned nest (if found near your site) or a picture of one.

- Various bird and nest pictures
- 25 spoons
- 1 box of toothpicks
- 5 pliers
- 5 tweezers
- 5 tongs
- 5 popsicle sticks
- 5 skewers
- 5 pipettes & Styrofoam cups
- Fresh and dried grass, weeds, sticks
- Pieces of string
- Strips of material/paper
- 1 bag of soil
- 25 Ziplocs
- 5 Styrofoam cups (to collect water as needed)
- Plastic egg with rock inside
- Spray bottle
- Fan
- 5 Thermometers

Teacher Preparation

Scope out a good place to take the Jr Scientists on a nature walk to collect items for their nest.

Investigation

1. Take a nature trip around the school and look for nests, birds, and places birds may call home. Tell the Jr Scientists that they will be playing the role of a bird in the desert. Each person will be building a nest. While on the walk they may collect items for their nest.
2. **Discuss:** ***What birds or nests did you see? Where might birds live near the school? Have you ever seen a nest? What kinds of nests do various birds build? What kinds of materials do they use to build their nest? What items did you collect? Why did you select those items?*** Look at the various pictures of nests and discuss what they are made of, where they are located, what birds build them, etc. ***What tools do birds have to collect and build their nests? What different kinds of beaks do various birds have? How might they be used to collect and build nests? What tools do we use to build our homes? How are they similar or different?***
3. Each Jr Scientist will play the role of the bird to build their nest. Because birds do not have hands with thumbs, the Jr Scientists must select one tool they would like to use to build their nest (tools should be set out with the available materials for easy access). Once they select their tool they may not switch nor use their hands to build their nest.
4. Jr Scientists may now begin collecting additional materials and

taking out their collected materials to build their nest – using only the tool they selected as their "beak". They cannot use their hands at any time.

5. As they build their nest walk around the room and ask where their nest is located, what kind of animal would live in it and how its inhabitant would enter the nest?
6. After they build their nest, test the nest –
   - Add weight to the nest to represent the bird they selected – will the nest support the extra weight when lifted without supporting the center?
   - Direct a fan over it and spray the nest – will it survive rain and wind?
   - Measure the nest temperature inside and out – will it protect the bird from heat and cold?
7. Jr Scientists may modify and/or rebuild to test again. They may also research the weight of their bird and where the nest would be located if needed to better test the nest and its environment.
8. **Discuss:** ***What was challenging in building the nests? What bird did you select and how did that change how you built the nest? What did you learn from testing the nest? What changes did you have to make to ensure the bird had a nest that protected it from the environment? Where would that bird's nest be located? How does the bird protect itself while in the nest from predators? What basic needs should every nest provide for the animal that lives there?*** The cactus wren's nest is shaped like a hollow ball with a single opening. This is a good example of meeting the basic needs by protecting it from the sun and by being located in the branches of a cholla cactus it protects it from predators.
9. Create a chart that details the tools needed to create the nests and the types of birds that may build that kind of nest. The group may include location, types of materials used to build the nest, environmental issues, elements to protect, etc. They may include the tools or draw pictures of the tools needed and the picture cards of the various birds and nests.

LIVING THINGS: DESERT ANIMALS

Week 6 – Desert Animal Super Sleuths

The Science Behind The Activities	Animals move, eat and sleep in many different patterns and with many different preferences. Jr. Scientists will investigate how desert animals live, eat and travel the vast lands of cacti and canyons.
Activity Sequence	• Who's Been Here? Holes, Scat and Tracks • Animal Locomotion • Literature Connection: Nature's Yucky! 2 The Desert Southwest by Lee Ann Landstorm & Karen I. Schragg • Scents of Smell
I Pad Applications	• iTrack
Setting	Classroom & Outside
Time Frame	20 minutes - 1 hour per activity
Plan Ahead	• Pack STEM To Go bags • Allow time for a snack (if provided)
To-Go	• Leaving Our Tracks

ACTIVITY –Who's Been Here? Tracks and Movement of Animals

Background

Animals each have unique features. Animal tracks and scat are often ways we can observe signs of animal life while out in the wild when animals are not around. Through observation of habitats we can learn more about the animals of that habitat and how they survive.

Unguligrade animals (cows and deer) essentially walk on their toe nails. These enlarged toe nails take the form of hooves which adapted to walking on hard surfaces. These footprints look like two semi-circles.

Digitigrade animals (coyote, dogs, rabbit) walk on their toes. Their toes are referred to as the claw. This is shaped to provide defense against predators. The prints show four toes and often a sole. A fifth toe is present but does not touch the ground and leave a print.

Plantigrade animals (humans nand bears) walk on the soles of the feet. When they leave footprints you will see the sole and toes but often not the toe nails or claws although they are present.

Some land animals have no feet but leave equally distinctive prints such as the sidewinder. Jr Scientists will use observation skills to interpret information while learning how to track animals and how they move and survive in Arizona. They will also study evidence animals leave behind and will discuss what we can learn about them based on this evidence.

Materials

- Picture cards : Evidence of animal life & animal camouflage
- 5-8 paw/print replicas
- 5-8 old shoes
- Butcher paper pad/roll
- Black water-based paint
- 5 Shallow aluminum pans
- 5 Pieces of felt (to be in the aluminum pan and act as ink pad)
- Animal prints from the paw print molds

Teacher Preparation

Follow the instructions in the Animal Tracks Kit to create plaster paw/print replicas. Distribute name buttons

Investigation

1. Divide the Jr Scientists into groups of 5.
2. Give each group a shoe to practice making prints. What clues will they use to help them recognize their foot prints in a group of others?
3. Each team saves its best sample and displays it. Have the Jr Scientists observe the various prints and look for similarities and differences.
4. Can they identify the type of shoe that made each print? Challenge the Jr Scientists to match the shoes with the prints.

What clues do they use to come to the conclusions?

5. Add the animal prints. Encourage groups to sort and categorize the prints. Create a class chart with the various categories.
6. **Discuss:** ***How are animal prints and shoe prints alike and different? What information can footprints give you? Show various footprints from a variety of animals (from 1st activity). Give the Jr Scientists the 3 different category names (Unguligrade, digitigrade, Plantigrade, no feet). See if they can categorize the prints based on these definitions.***
7. Give each group a diagram of the "Who's Been Here?" What type of living things might have made these prints? Using clues from the drawing, prepare a story describing what happened in the picture. Share out the stories.

ACTIVITY – Animal Locomotion: Gathering research through observation and modeling

Introduction

Understanding animal anatomy is not only useful to the animal professional, but also serves to assist scientists and engineers in designing robots, planes, boats, submarines, cranes, and many other devices and vehicles. In this session, children will explore the musculoskeletal systems of different animals as they move and then model its leg or arm by representing them as a system of gears and levers. Finally, Jr. Engineers will put themselves into the role of a veterinarian and diagnose x-rays such that they will have to rebuild the elbow or knee joint system of animal limbs in order to help the animal to walk again.

Instructor Background

The Parts and Functions of Canine Anatomy

Physically, animals are not that much different from us. Here is a brief overview of the form and function of canine anatomy as compared to ours. This knowledge may be useful when you are talking with your veterinarian or other animal professional about your dog.

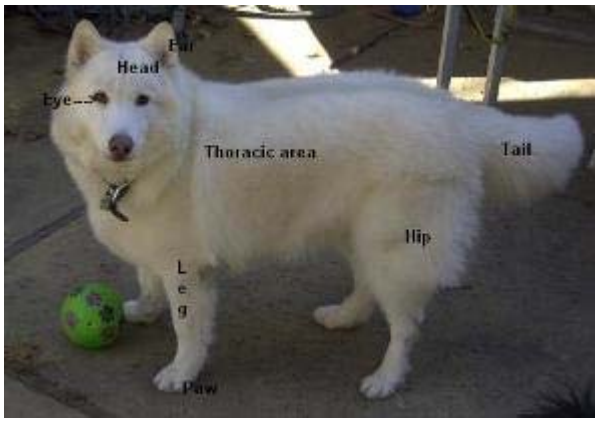

Musculoskeletal System

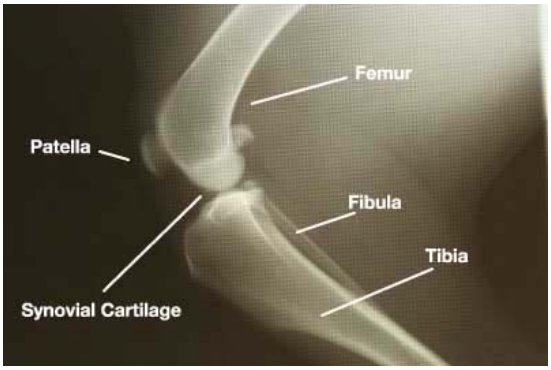

Dog Leg

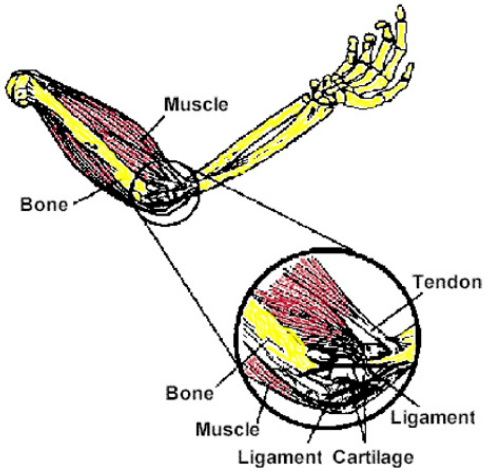

Human Arm

The skeleton is part of this system and is the framework for the dog. The musculoskeletal system also includes the muscles, ligaments, joints, and tendons that allow the dog to move. The major parts of the musculoskeletal system are:

- **Bones**: Bones are rigid, and are composed of calcium, phosphorous, and other minerals. Not only are they the body's framework, but bones also protect delicate organs.
- **Muscles**: Muscles provide movement to all parts of the body. The two different types of muscles are smooth and striated. The smooth muscles work involuntarily to help the body perform necessary functions such as breathing. Striated muscles are voluntary muscles used for activities such as chewing and walking.
- **Tendons**: Tendons are the fibrous bands that connect the muscles to the bones.
- **Joints and Ligaments**: Joints are the place where the bones meet and their ends are covered by cartilage.

Ligaments join bones together and are usually found in joints.

Materials

- 25 STEM Club Notebooks
- 25 Pencils
- 5 rolls masking tape

Teacher Preparation

- ****If technology is availab**le** Browse web links for various animals ahead of time to verify link connections.

Investigation

1. *****If technology is available*****
   Engage: Watch films of animals moving: cheetah or lion, bear, bird, lizard, squirrel, frog, dog, or insect. If no technology is available, have Jr. Engineers talk about, discuss and model how different animals move.

General:
http://player.discoveryeducation.com/index.cfm?guidAssetId=7D7B69D5-32E3-402A-B654-2766F963CA19&blnFromSearch=1&productcode=US
Cheetah: http://www.youtube.com/watch?v=KIeXEiJuJUY
Bernard the Bear:
http://www.youtube.com/watch?v=MPc137Wukww
Greyhound: http://www.youtube.com/watch?v=l5D-suNvUw4
Deer and Fox:
http://www.youtube.com/watch?v=BsHhR46wKss&feature=related
Bear:
http://www.youtube.com/watch?v=xn_6GQGdyww&feature=related
Squirrel:http://www.youtube.com/watch?v=rNVTknsQ1ek&feature=related
http://www.youtube.com/watch?v=JuPYZX2cUXE&feature=related
Lizard:http://www.youtube.com/watch?v=_ut5jENqBX8http://www.youtube.com/watch?v=XAo09yYOpCU&feature=fvw
Frog: http://www.youtube.com/watch?v=yaAzdK4lkxU

*****If technology is not available*****
How Animals Walk Activity (By Eddie Goldstein)
Engage: Discuss the different walking styles seen by animals: **Alternate (same side, diagonal, & independent) & Simultaneous**. Call up Jr. Engineers one at a time and have them each model a different animal & style of walking. Examples: Pigeon & Sparrow (alternate & simultaneous), Human (modified diagonal walk, similar to that seen in lions), Lion (diagonal), Camel (same-side), Gorilla (independent), Kangaroo (simultaneous walking & running), Gibbon (alternate). Once all animals have been

acted out, have Jr. Engineers walk in a parade around the room acting out their animals.

2. Ask Jr. Engineers to make observations about how each animal moves. ***Discuss: Are there similarities? Differences? Why? Discuss muscles, bones, etc. and tie into gears and levers.***
3. Each Jr. Engineer chooses an animal to model its motion.
4. Have each Jr. Engineer put tape on their own body along the sides of their limbs to help highlight the levers and joints of their arms, legs, and back. For gears/joints, place a taped 'X' and levers just a long line of tape (see below).

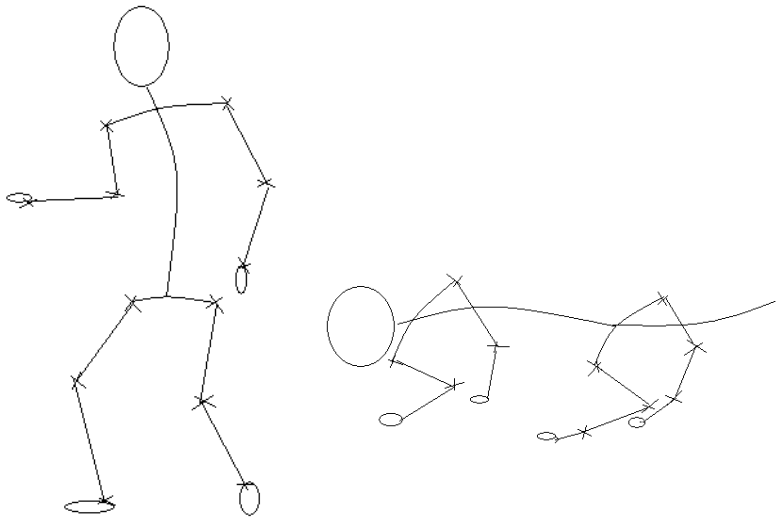

5. Have Jr. Engineers try and mimic the motion of their animal. <u>They should pay particular attention to the movement of the limbs, hips and back as they work together during movement.</u>

- ***How does it feel to move like your animal? Do you feel different muscles working than the way you normally walk or run?***
- ***How does it look verses the way you normally walk? Do the hips move differently? If you were running, walking, or hunting as your animal, how would this affect how the hips, legs, or arms move?***
- ***What activities does your animal regularly engage in that determine the limb's formation?***

6. Have Jr. Engineers pick a limb of their animal (legs or arms) to model in their notebooks. Jr. Engineers draw the limbs and label what they think is inside their animal's leg or arm: joints and ligaments, muscles, tendons, and bones.
7. ***Discussion: Focus on the subtle differences in the joints between the front and back legs. Do the paws look, function, and move differently between the front and***

back? How are the different forms related to function (defense and hunting)? Related to movement? Related to how they eat - do carnivores have different limbs verses herbivores? How do the muscles work? Do they only contract or expand? Where do the muscles attach to the bones? How does the location of attachment affect leverage? How does this attachment cause the joint to bend? How does a joint work?

ACTIVITY – Literature Connection

Background

Jr. Scientists will continue to discuss how we use evidence animals leave behind to study animals and their habitats. Scientists also use technology to share and collaborate on research. They will also learn about the many adaptations desert animals have that enable them to thrive in the Sonoran Desert.

Materials

- Literature Connection: Nature's Yucky! 2 The Desert Southwest by Lee Ann Landstorm & Karen I. Schragg

Investigation

1. Read and discuss the adaptations of Sonoran Desert Animals as you read *Nature's Yucky! 2 The Desert* Southwest. **Discuss:** ***What is the animal's habitat? What do we know about the animal? What adaptations does this animal have? What predators does this animal have? How was that information gathered? How do we study animal life in their native habitats?***

ACTIVITY – Scents of Smell

Background

Jr Scientists will learn how coyotes' strong sense of smell helps them survive in the desert.
For information about canines' sense of smell go to:
http://www.aces.edu/pubs/docs/U/UNP-0066/UNP-0066.pdf
For information about coyotes go to:
http://animals.nationalgeographic.com/animals/mammals/coyote/
http://www.desertmuseum.org/kids/oz/long-fact-sheets/coyote.php

Materials

- 25 - 4”x4” squares of fabric (multiple patterns)
- 5 – 1’x2’ fabric rectangles
- 5 different extracts (1 container of each- ex. Mint, lavender, vanilla, etc.)
- 5 gallon baggies
- 1 paper grocery bag
- Picture Cards: Dog Nose

Instructor Preparation

The morning of the activity, place 5 squares of fabric and 1 fabric rectangle in each gallon bag (all the fabrics in the bag should be different patterns). Place one extract in each bag (make sure to label the bags with the name of the extract).

Before the activity starts, place all of the bags of scented fabric into the paper grocery bag.

Investigation

1. Allow Jr Scientists to explore the Dog Nose pictures. ***Why do canines have such a strong sense of smell? Is the nose of the coyote similar to the nose of the dog in the diagram? Are all dog noses the same? Why or why not? How does the nose of the coyote compare to our nose? What do coyotes use their sense of smell for? What other animals do you know of that have a strong sense of smell?***
2. Explain to the Jr Scientists that they are all coyotes, and will be using their sense of smell and powerful nose to find their pack members.
3. Walk around the room and give each Jr Scientist a square of fabric (do not let them see which bag it was pulled out of). Inform them that each square has a scent on it, and the scent of their square of fabric is the scent of their coyote pack.
4. Place the fabric rectangles in four separate areas in the room. These will be the coyote “dens.”
5. Encourage them to walk around the room and find their other pack members by only using their sense of smell.
6. Once they find their full pack, they can then use their sense of smell to find their coyote den as a pack.
7. ***Discuss: Was it difficult to find your pack members? What other animals might use their sense of smell to identify their “pack” members? What other variables in the desert could animals use their sense of smell for? How do coyotes and other desert animals mark their territory or den? Why do they mark their territory?***

WATER ON EARTH: WATER CYCLE

Week 7 – Exploring the Water Planet

The Science Behind The Activities	Jr. Scientists will become water droplets and will discover how much water the earth has, how much water we can use, and how much water we really do use. The water cycle and current usages of water will be explored, calculated and evaluated to make better decisions for our future.
Activity Sequence	• Cloud in a Bottle • Literature Connection: Water Cycle Interactive http://oceanservice.noaa.gov/education/pd/oceans_weather_climate/media/watercycle.swf • The Water Cycle • Water on earth
I Pad Applications	• The Water Cycle
Setting	Classroom & Outside
Time Frame	20 minutes - 1 hour per activity
Plan Ahead	• Pack STEM To Go bags • Allow time for a snack (if provided)
To-Go	• Boot Camp

ACTIVITY – Cloud in a Bottle

Background

This activity is a demo to be done by the instructor, as an introduction to the water cycle.
For information on cloud formation go to :
http://kids.nationalgeographic.com/kids/photos/gallery/clouds/#/low-cloud-stratocumulus_13950_600x450.jpg

Materials

- 1 clear 2L bottle
- 1 bike pump
- Tap water
- Rubbing alcohol

Teacher Preparation

Fill the 2L bottle approximately 2”-3” full of water.

Investigation

1. Begin a discussion with the Jr Scientists about the water cycle. ***Where does water come from? What are the different forms water can be found in? What are clouds made of? What elements is make up water?***
2. Attach the bike pump to the opening of the 2L bottle, without letting the water spill out.
3. Ask one Jr Scientist to pump the handle of the bike pump 10 times.
4. Remove the bike pump, and a cloud should be visible in the bottle.
5. A few drops of rubbing alcohol can be added to the bottom of the 2L bottle, which will make the cloud more visible.
6. ***Discuss: How was the cloud formed? What would happen if we did 20 pumps instead of 10? Why did the rubbing alcohol make the cloud more visible?***

ACTIVITY – Literature Connection

Background

Jr. Scientists will continue to discuss the water cycle. They will explore the National Weather Service website, learning how to read the weather and precipitation forecasts.

Materials

- http://www.weather.gov/

Investigation

1. Explore the website as a group. First select Arizona on the main page map.
   - You can then select various cities on the map to find that city’s weather forecast.
   - Select the “Rivers and Lakes” tab to look at the precipitation

topo map.
- At the bottom of the page you can select the satellite, weather map, or geographical forecasts to look at various weather maps.

2. Back on the main page, select "Rivers, Lakes, & Rainfall." Ask the Jr Scientists to compare what they observed on the Arizona maps to what they see on the map of the country.
3. ***Discuss: Why do certain areas have more or less precipitation than others? How do the precipitation maps compare to the geographical maps? Are there any relationships that you notice between the different maps?***

ACTIVITY – The Water Cycle: The Incredible Journey by Project WET

Background

Water can be found in many different forms all over the world. The water cycle consists of 9 major elements where water continuously changes form and moves. Water can be found in rivers, lakes and the ocean, in plants and animals, in the soil and in groundwater and in glaciers and clouds. Many students have some idea of the basic water cycle but are not always aware of the many places water can be found nor how little of it we actually have access to and can use. This exercise will create a picture of the water cycle from a personal perspective as a water droplet.

Materials

- **9 water cubes (boxes with pictures representing the water cycle from the 9 different water locations – see guidelines for building the cubes out of small boxes)**
- **9 picture signs for each of the 9 locations**
- **9 Ziploc bags of beads: dark blue(ocean), light blue(lake), clear blue(river), white(glacier), clear(clouds), brown(ground water), tan(soil), red(animal), green(plant)**
- **25 pipe cleaners**
- **STEM notebook and pencils**
- **5 pack of colored pencils**

Teacher Preparation

- Hang up the 9 signs around the room with a table/chair below with the related bag of beads and cube.
- Place the STEM notebooks and pencils in the center of the table with instructions to draw the water cycle as they enter the room. Move around the room requesting Jr Scientists to elaborate and to think about other locations that water may be found.

Investigation

1. Have Jr Scientists the water cycle in their notebooks. Have the groups collaborate as desired and encourage them to elaborate and to think about other locations water may be found (often glacier and ground water or soil are left out as may plants and

animals)

2. **Discuss:** ***What is the water cycle? Where do we find water on earth? How does it change locations? Forms? (Ask questions to draw out the missing locations of water if they are not addressed in the discussion) Does the water cycle always work in this way? In this order?***
3. ***Today you are going to become a water droplet and go on an adventure – your own water story. You will each take a pipe cleaner and will pick a place to begin*** (they may begin anywhere around the room at any of the locations – suggestion to split them around the room so there isn't a line anywhere). ***At each location you will take a bead representing that location and then will roll the dice to see where you will go next. If you draw another place you will get in line there and repeat the procedure. If you get 'STAY' you will get back in line and when it is your turn, take another bead and roll the dice again. You all will go on your own adventure – each one unique***. (Send them out to begin and monitor – asking questions to encourage them thinking about why they got Stay or were sent to a specific place, etc. Give about ***20 minutes*** for them to be a water droplet on an adventure and then call them back to their seats or the reading area.
4. **Discuss:** ***What happened on your adventure? Did you all follow the water cycle you drew? Why not? Did anyone get stuck in one location or between two locations? Why? (***Have the Jr Scientists turn to a partner and tell their partner their story – encourage a story – explaining how and why they moved from location to another rather than just listing the bead locations. Ex: Rather than saying 'ocean, cloud, cloud, lake' they would say I was swimming in the ocean and rose to the top when the heat changed me and I floated up to a cloud as a gas, I stayed in the cloud a while before the cloud got too heavy and I began to fall as rain landing in a lake'
5. Have the Jr Scientists turn their pipe cleaner into a bracelet and have them hold onto their bracelet for the second part of the activity.

ACTIVITY – Water on Earth

Background

Jr. Scientists will continue to understand the water story by calculating and graphing the beads collected during the first activity. This will give them a visual picture of how much water is found in the ocean vs lakes and rivers and in the clouds vs in plants and animals.

Materials

- STEM notebooks
- Water Story bracelets

- 5 packs of markers
- 1 Water on Earth Chart
- 5 sheets 11 x 17 poster paper

Investigation

1. Jr. Scientists, working in groups, will add up the totals for each bead color representing the various locations water can be found on earth. They will share these totals to complete a whole-group chart on the white board.
2. As a whole group the Jr Scientists will collaborate to calculate percentages of water in each of the 9 locations.
3. Groups will create a pictoral graph to show this data in a creative way. Groups will then share out.
4. **Discuss:** ***Which location has the most/least water? Did this surprise you? What was frustrating about the experience? What did it tell you about the water cycle and where the water is located on earth? If you were to draw your water cycle again what would you draw differently? How would you tell the water story?***

WATER: HOW PEOPLE GET IT AND USE IT

Week 8 – What if we drink up all the water in the world?

The Science Behind The Activities	Jr. Scientists will explore the concept of aquifers, and how they are an important source of water for desert life. They then will investigate how continued developments in technology based on historical inventions allow us to survive in the middle of a desert. A good resource for information about the history of Arizona's water usage is: http://www.srpnet.com/education/azwaterstory.aspx.
Activity Sequence	• Edible Aquifer • Irrigation Challenge • Water Field Studies
I Pad Applications	• ArcGIS
Setting	Classroom & Outside
Time Frame	20 minutes - 1 hour per activity
Plan Ahead	• Pack STEM To Go bags • Allow time for a snack (if provided)
To-Go	• TapH2O Testing

ACTIVITY – Edible Aquifer

Background

An aquifer is an underground source of water. When the particle size of the sediments in an aquifer is larger, there is more space for water to flow through the aquifer. When the particle size of the sediments is smaller there isn't as much room and water moves through it more slowly. There are many aquifers throughout Arizona and are major sources of drinking water.
For more information about the locations of Arizona aquifers go to: http://water.usgs.gov/ogw/NatlAqCode-reflist.html.
For more information on aquifers go to: http://ucanr.org/sites/smsf4h/files/74820.pdf.

Materials

- 4 clear plastic cups
- 1 cup of gravel
- 1 ½ cups of sand
- 1 ½ cups of clay
- 1 measuring cup
- 1 pitcher w/water
- 1 timer
- 1 butter knife
- Aquifer website or Picture cards: Aquifer maps
- Picture cards: Aquifer Diagram

For Edible Aquifer:

- 50 clear plastic cups
- 25 spoons
- 1 package Oreos (finely crushed)
- 1 box graham crackers (finely crushed)
- 1 bag Rice Krispies (roughly crushed)
- 1 bag Nilla Wafers (finely crushed)
- 1 bag cornflakes
- 1 bag Reese's
- 1 bag Raisin Bran
- 1 bag gummy worms
- 1 bag M&M's
- 1 gallon of milk

Teacher Preparation

Set up the demo part of the activity while the Jr Scientists are working on the previous activity. Fill one cup with gravel, one cup with sand, one cup with clay, and one cup half full of sand topped by a 1" layer of clay. Leave one inch of space between the rim of the cup and the sediments. Fill the pitcher with water.

Fill 25 of the clear cups with milk. Mix the Raisin Bran, worms, & M&M's together (this will be one type of sediment). Fill 5 bowls with each of the edible aquifer "sediments".

Investigation

1. Divide the Jr Scientists into groups of 5.
2. If technology is available explore the following website as a group, while discussing the importance of aquifers as a source of water in the desert: http://ucanr.org/sites/smsf4h/files/74820.pdf. If technology is not available, allow the Jr Scientists to explore the aquifer maps. Distribute an aquifer diagram to each group.
3. ***Discuss: Where does the water come from that fills an aquifer? How many layers are in an aquifer? Which layers have smaller particles and which have larger particles? In which layers will water run through faster? In which layers will water run through slower? What are some ways to remove the groundwater for use by people? What will happen if the aquifers do not get "re-charged?"***
4. Set up the sediment cups in the front on the class, and ask one Jr Scientist to be in charge of the timer. Explain that you will be testing to see the speed at which water will run through the different sediments. Allow each group to hypothesize which they think will be the fastest and slowest.
5. When the timer starts, pour ¼ cup of water into the gravel, timing how long it takes to reach the bottom. Do the same for the cups of sand and clay. ***Which was fastest? Which one took the longest? Why do we see these results?***
6. Keep adding water to each cup until the water level is even with the top of the sediment. Make sure to keep track of how much water is added to each cup. ***Which sediment holds the most water? Why?***
7. Pour ¼ cup of water into the cup of sand & clay. ***Does the water seep in? Why?*** Take the knife and slice through the clay. ***What results do we see now?***
8. Distribute one cup and one spoon to each Jr Scientist. Give each group one bowl of each edible "sediment." Explain that the Jr Scientists will be building their own edible aquifer. Each edible "sediment" represents a different layer of a real aquifer. They can use the Aquifer diagrams to help guide them in choosing which edible "sediments" correspond to actual aquifer sediments (see key below).
9. Once they have built their aquifers, distribute one cup of milk (which represents water) to each Jr Scientist. They can then pour the "water" over their aquifer to see if their chosen sediments correspond to the actual aquifer layers.
10. ***Discuss: Which edible sediment was similar to the conservation layer? Topsoil? Subsoil? Fine Sand? Coarse sand? Clay? Shale? Bedrock? How could you make the "water" move slower through the layers using the edible sediments provided? What are some other edible sediments that could be used to represent natural aquifer sediments?***

KEY

Conservation Layer	Mix of Raisin Bran (grass, bugs & worms), M&M's (stones), & gummy worms (worms)
Topsoil	Ground Oreo
Subsoil	Ground Oreo & Graham Cracker Mix
Fine Sand	Ground Graham Cracker
Coarse Sand	Rice Krispies
Clay	Nilla Wafers
Shale	Corn Flakes
Bedrock	Reese's

ACTIVITY – Irrigation Challenge

Background

Jr. Scientists will learn about the history of irrigation in Arizona and the methods in which water can travel across the desert.

Materials

- Irrigation video clip and/or Picture Cards
- Picture Cards: Archimedes Screw
- 13 straws
- 13 pipe cleaners
- 13 clear plastic folders
- 5 scissors
- 26 bowls
- 1 bag of sugar
- 25 STEM notebooks
- 25 pencils
- 5 water bottles (can be empty and filled at the site)
- 10 Garbage Bags
- Bag o' Tape (duct, masking, scotch, electrical)
- Various recyclable materials (misc. plastic & cardboard)
- Paint stirrers and popsicle sticks
- Paper towels
- Tablecloth

Investigation

1. Show the irrigation clip and/or distribute the picture cards. Encourage Jr Scientists to investigate the pictures/clip that they see. ***Discuss: What is the purpose of an irrigation system? How does it work? Where does the water come from that fills the canal? Is it safe to drink the water straight from the canals?***
2. Discuss the Archimedes Screw and how it applies to irrigation canals. ***Discuss: How is the waterpulled along the screw? What happens to the lowest & highest point of***

the spiral as the rod turns? What materials would be used to build an Archimedes Screw?

3. Place the recyclable materials, garbage bags, paint stirrers, Popsicle sticks and tape at the front of the room. Challenge the Jr Scientists to build an irrigation system that can transport water utilizing the materials provided, while only spending $10 (price sheet is in the STEM notebooks).
4. ***Discuss: Why is there a price limit on the supplies? What materials worked best? What was the purpose of the garbage bags? What are challenges that were overcome in building the canal system? Were you able to move water up a surface? How?***

ACTIVITY – Water Field Studies

Background

Jr Scientists will continue their field study investigations by looking at how to conduct water studies. These water samples will be from different habitats in Arizona and they will provide the experience for the Jr Scientists to replicate when they are out in the field. To learn more see:

- http://www.extension.iastate.edu/naturemapping/Teacher%20Materials/Field%20Investigations.pdf
- http://srel.uga.edu/kidsdoscience/kidsdoscience-wetlands.htm
- http://ga.water.usgs.gov/edu/

Materials

- **Magnifier**
- 5 water bottles filled with deionized or distilled water
- Ice (may need cooler)
- 2 clear coke bottles
- PH test strips and chart
- Turbidity chart and approx. 6” diameter container
- Dissolved oxygen tablets
- Thermometer (that can be placed in water)
- Water Cards
- 1 box Plastic wrap
- 5 pieces of dark construction paper
- 5 Pipettes & Styrofoam cups
- 5 magnifiers

Teacher Preparation

Set out different testing materials at each of the tables. Each station will have 2-3 different water samples to test.

Investigation

1. Discuss with the Jr Scientists that they will learn the procedures in conducting water studies. At each of the groups different testing materials are available. Encourage

the Jr Scientists to try out each of the various water study procedures to learn how to conduct water studies the next time they are near a creek or lake. As the groups conduct testing, move around and ask questions relating to the procedures and why we might want to know about the various tests (to grow plants, to provide fishing, to understand why a species isn't surviving anymore in its habitat, etc.).

2. **Discuss:** ***What tests did you conduct? What data did you collect and what does it mean? What differences did you notice between the different samples of water? Why would we want to conduct the various water studies? Where might you be able to conduct a water study?***

SHELTER: SURVIVAL IN THE DESERT

Week 9 – Building a home for an ant, a javelina and me

The Science Behind The Activities	Jr. Scientists will explore the homes of ants, javelinas, cactus wren and many more of the Sonoran desert's native creatures. They then will apply their new research to their personal experiences of living in the desert to design and build a shelter.
Activity Sequence	• Shelter Dichotomy • Literature Connection: Truax by Teri Birkett http://www.stuartflooring.com/downloads/truax.pdf • Endangered Arizona Animal Shelter • Design Squad Challenge: 10 minute shelter
Setting	Classroom & Outside
Time Frame	20 minutes - 1 hour per activity
Plan Ahead	• Pack STEM To Go bags • Allow time for a snack (if provided)
To-Go	• Family Engineering

ACTIVITY – Shelter Dichotomy

Background

Animals need shelter to survive in their habitat. Some animals live in nests high up in trees while others live under the ground. Some build their homes with available resources while others use shelters found in their habitat. This activity will give the Jr Scientists an opportunity to see very different shelters and will use their previous knowledge to determine what they can learn about the animal and it's habitat based on the shelter. They will organize their pictures using a technique they have learned to use just like scientists do everyday.

Materials

- Picture Cards: Various Arizona desert animal shelters

Teacher Preparation

- Set out the picture sets at each table as the Jr Scientists enter. Have them view, discuss and categorize the shelters. Walk around the room facilitating questioning and discussions. Encourage them to create a dichotomous key of the pictures.
- Distribute name buttons

Investigation

1. As the Jr Scientists enter have them view, discuss and categorize the shelters. Walk around the room facilitating questioning and discussions. Encourage them to create a dichotomous key of the pictures.
2. **Discuss:** ***What types of shelters did you see? Have you seen them before? What animals live in them? What habitat can you find them in? How do you know that? What materials were the shelters made from? What categories did you organize the shelters into? Why did you select those categories? Did the dichotomous key help you organize and understand the pictures? Why or why not? What might be another way to organize shelter pictures?***

ACTIVITY – Literature Connection

Background

Jr. Scientists will continue to talk about habitats and shelters and utilizing natural resources to build shelters. Have them sit in the designated reading area and encourage questions and discussions as you read the story that is an adaptation of the Lorax by Dr. Seuss.

Materials

- Truax by Teri Birkett
  http://www.stuartflooring.com/downloads/truax.pdf

Investigation

1. Read Truax by Teri Birkett. Ask questions and encourage

discussion throughout the story. For those who have read the Lorax by Dr. Seuss, encourage them to look for similarities and differences.

2. **Discuss:** ***What was the story about? What message was it trying to tell? How does this relate to you? To Arizonans? In relation to shelters, what would the character in the book do if they were building a shelter in the Sonoran Desert? In the Ponderosa Pine Forests? In the Plateau region of Arizona? What would you do?***

ACTIVITY – Endangered Arizona Animal Shelter

Background

Jr. Scientists will use their newly found skills and knowledge on building a shelter and their previous knowledge on the desert habitat and its inhabitants to build a shelter for an endangered Arizona animal. They will use and research information needed to build a shelter that would be in the habitat where the creature lives and would protect the creature from the environment and predators they may face. They will then share out their knowledge through the presentation of their shelter.

Materials

- Picture Cards: Endangered Animal Challenge Cards
- Various building supplies and (dirt, paper, straws, clay, etc.)
- Misc. Recyclables (Boxes or lids)
- Misc. Cardboard & Plastic
- Straws
- Clay (left over from previous weeks)
- 5 bottles of glue
- 5 rolls of scotch tape
- 5 rolls of masking tape
- 2 rolls of duct
- 3 rolls of electrical tape

Investigation

1. Jr. Scientists will work in groups to build a shelter for an endangered Arizona animal based on that creature's habitat, environment and predators. Walk around the room facilitating questions and discussions. The Jr Scientists will share out when done.
2. **Discuss:** ***What shelter did you build and who was it for? What habitat do they live in? What environmental elements would they have to protect themselves from? What predators would they have to protect themselves from? What would make your shelter more useful for the creature?***

ACTIVITY – Design Squad Challenge 4: Speedy Shelter by pbskids.org

Background

Jr. Scientists will have the opportunity to participate in an actual Design Squad Challenge. Their challenge: to invent an emergency shelter that is sturdy and quick to build that can fit a person. Through these challenges Jr Scientists will use the design process, creativity and quick thinking to complete the task. To see the full challenge please see: http://pbskids.org/designsquad/pdf/parentseducators/DS_Invent_4_Speedy_Leader_ENG.pdf

Materials

- 10 8 ½ x 11 cardboard sheets (2 per team)
- 80 3ft bamboo plant stakes (16 per team)
- 15 33 or 42 gallon garbage bags cut open into sheets (3 per team)
- 5 pair of scissors
- 5 rolls of duct tape
- 5 rolls of string
- 1 stopwatch

Investigation

1. Introduce the challenge scenario: http://pbskids.org/designsquad/pdf/parentseducators/DS_Invent_4_Speedy_Leader_ENG.pdf
2. Brainstorm ideas for a solution in groups. Show them the materials they may use and allow time for planning.
3. Time the Jr Scientists as they build (10 minutes), test (as a group) and redesign the structure (5 minutes). Walk around the room asking questions and facilitating discussion.
4. **Discuss:** ***What design did you select? Was it successful? Did you have to modify it at any time? Why? Is it stable? How can you make it more stable? What forces are affecting your shelter? How can you counteract those forces? What shape or structure seems to be the strongest? How can you utilize those shapes in building a shelter? Would you use this shelter in case of an emergency? Would it be an effective shelter in the desert region? Mountain region? Plateau region? In the summer? Winter? During a rain/snow/dust storm? What modifications would you do to make a shelter you could survive in?***

OUR HUMAN FOOTPRINT

Week 10: Connecting Arizona's Past, Present, & Future

The Science Behind The Activities	Jr. Scientists will explore their ancestor's past to understand how they are similar and different to how we live today. They will calculate their own footprint to apply current data to decisions for our future.
Activity Sequence	• Trash Talk • Literature Connection & Activity: Human Footprint by Ellen Kirk & Calculating our Human Footprint • Harmless Holder
I Pad Applications	• 7 Wonders of Green Building Technology
Setting	Classroom & Outside
Time Frame	20 minutes - 1 hour per activity
Plan Ahead	• Pack STEM To Go bags • Allow time for a snack (if provided)
To-Go	• Petroglyphs

ACTIVITY – Trash Talk

Background

Jr. Scientists will discuss various ways that archeologists are able to learn about past civilizations. They will practice their observation and classification skills through investigating what has been left behind by people of the past.

Materials

- Picture Cards: Arizona Historical Pictures
- 5 garbage bags
- 25 pairs of gloves
- Butcher paper
- 25 Permanent Markers
- 25 Pencils
- 25 Notebooks
- 1 pack of baby diapers
- 1 pack of wipes
- Various empty food & drink containers
- Misc. Trash

Instructor Preparation

Fill each garbage bag with diapers, wipes, empty food & drink containers, & misc. trash (make sure that the containers & trash have been rinsed out/are not too messy). Cover 5 tables with butcher paper, placing one bag of trash and permanent markers at each table.

Investigation

1. Jr. Scientists will brainstorm some ways that archeologists are able to learn about civilizations of the past. Allow them to explore the pictures of the remnants of civilizations that have lived in Arizona.
2. Divide the Jr Scientists into 5 groups, and send each group to a table covered in butcher paper. ***They must wear gloves while doing this activity.***
3. Challenge them to utilize their observation and classification skills to determine whom the "trash" belonged to. They can record their findings in their notebooks and use the butcher paper to make notes about what they find. When done, have all groups share out.
4. ***Discuss: What types of things did you find in the trash? Did it belong to a family? Can you determine how many people were in the household? Were there any pets in the household? What are some other trash items that could help you learn about a person? What types of things do you think someone could learn by going through your trash? What would you find in the trash left by Arizonans from 25 years ago? 100 years ago? 200 years ago? How is trash disposed of in the 21st Century? How was it disposed of in the past?***

ACTIVITY – Literature Connection

Background

Jr. Scientists will continue their discussion of studying their past and present to make decisions for their future. Have them move to the designated reading area and read, view and discuss Human Footprint by Ellen Kirk. Our human footprint in a measurement of our personal demands on the earth. Talk about the impact our footprints leave on our habitat and environment and have the Jr Scientists begin to think about their own personal footprint.

Materials

- Human Footprint by Ellen Kirk
- Web links and apps to calculate footprints online:

http://www.footprintnetwork.org/en/index.php/GFN/page/calculators/
http://channel.nationalgeographic.com/channel/human-footprint/consumption-interactive.html

- 25 STEM Notebooks
- 25 Pencils

Investigation

1. Jr Scientists will explore what a human footprint is and look at our society's impact on earth. Facilitate questions and discussion as you read Human Footprint by Ellen Kirk.
2. **Discuss:** ***What surprised you about our human footprint? What was expected and unexpected? How do you think your footprint differs? Is it greater? How could you change your own demands on the earth?***
3. Investigate the online footprint calculators as a group. Then, using the Footprint Chart in the STEM notebooks, calculate the STEM Club's footprint.
4. **Discuss:** ***What is your footprint? What does that mean as a club? Family? School? Community? State? How can we change the impact we have on earth? How does our footprint impact our habitat and the creatures who share it? How will our use of natural resources impact our future? What can we do to reduce our footprint so that we have more resources to enjoy in our future?***

ACTIVITY – Harmless Holder (Source: PBS.org)

Background

Jr Scientists will re-design the soda can holder, making it eco-friendly and reducing its' footprint.

Materials

- Picture Cards: Soda Can Holder
- Paint stirrers
- 2 String Rolls
- Newspaper

- 1 Wax Paper
- 1 Foil
- 1 Bag of misc. rubber bands
- Misc. cardboard
- 1 Bag o' Tape (duct, scotch, electrical, masking)
- 50 pipe cleaners
- 15 rulers
- 1 roll bubble wrap
- 30 full cans of soda
- 25 STEM Notebooks
- 25 Pencils
- 25 Shopping Lists
- 5 sets of fake money

Instructor Preparation Set up the supply "store" at the front of the room.

Investigation

1. Divide the Jr Scientists into groups and pass out STEM pencils & notebooks. Give each group a shopping list and money.
2. Share the picture cards with the Jr Scientists. ***Discuss: Why are the soda can holders bad for the environment? Why are they bad for wildlife? What are some other items that are commonly used that are bad for wildlife and the environment?***
3. Explain that they will have to design a new soda can holder that must: hold six cans, be easy to carry, is eco-friendly and safe for animals, is convenient to use, and costs no more than $5 (the price list is found in the STEM notebooks). They should draw their design out first in their notebooks, then fill out the shopping list and take it to the supply store to "purchase" the supplies with their money.
4. Before they start to shop, move around the room encouraging group discussions. ***How can you hold six cans together? Should you arrange the cans on end? On their sides? Stack them? How will you make sure that the cans can be easily removed? How will you carry the holder? What supplies will support the weight of the cans best?***
5. Have each group share out their designs. ***Discuss: What about your design worked, and what didn't work? Did your holder support the weight of the cans? Was your handle easy to carry? Was it easy to remove the cans from the holder? What was your favorite part of doing this activity? Are the materials recyclable? What other materials could you use or experiment with other than what we provided? What other products do you know of that are harmful to animals when they become trash? Can you use the materials provided to redesign them?***
6. If there is time, have the Jr Scientists re-design & re-test their holders.

ARIZONA SCIENCE CENTER

STEM To-Go

TapH2O Testing

Celebrate Arizona – Week 8

This week you explored water on earth and how humans use it. You discovered the world of minerals and pH levels through conducting and analyzing water studies. Now you have the opportunity as a family to test the water that comes out of your sink's faucet.

Supplies: 3 small cups w/lids, 1 spoon, 1 copper tab, 1 pH tab, 1 hardness tab, and 1 color chart.

Challenge: Can your family determine the levels of pH, Copper, and Hardness (the concentration of minerals in the water) found in your tap water?

1. Sit together as a family and discuss pH, copper, and hardness levels. Why do we test for these things? Do you think that the levels will be normal?
2. Place each tab in its own cup. Using the spoon add 1 spoonful to each tab. Cap the containers and mix. Observe the reactions that occur when water is added. Compare the results of these water samples to the color chart.

Think About: What color did the pH sample turn? What does this mean? What color did the copper sample turn? What does this mean? What color did the hardness sample turn? What does this mean? Why do you think you saw these results? What would the results be if you tested a water sample from the Colorado River? From Lake Pleasant? From purified drinking water? Do you think that the results would be the same for all of the water samples? Why or why not? What other tests could you perform on your tap water samples? What kind of careers involve water testing and water field studies?

Family Connection: What was your favorite part of doing this activity with your child? What other materials did you use or experiment with other than what we provided?

ARIZONA SCIENCE CENTER

STEM To-Go

Prueba de agua potable

Celebra Arizona — Semana 8

Esta semana exploraste el agua de la Tierra y cómo los humanos la usan. Descubriste el mundo de los minerales y los niveles de pH llevando a cabo y analizando estudios de agua. Ahora tienes la oportunidad como una familia de examinar el agua que sale del grifo de la cocina.

Materiales: Tres pequeñas tazas con tapas, una cuchara, una tableta de cobre, una tableta de pH, una tableta de dureza y un diagrama de color.

Reto: ¿Pueden tu y tu familia determinar los niveles de pH, cobre y dureza (la concentración de minerales en el agua) que se encuentra en el agua potable?

1. Siéntense juntos como una familia y discutan los niveles de pH, cobre y la dureza del agua. ¿Por qué hacer pruebas de este tipo? ¿Crees que los niveles serán normales?
2. Pon cada tableta en cada una de sus tazas. Usando una pipeta agrega la misma cantidad de agua a cada una de las tabletas, hasta que la taza este llena a la mitad. Observa las reacciones que ocurren cuando el agua es agregada. Compara los resultados de estas pruebas de agua al diagrama de color.

Piensa sobre: ¿Qué color mostró la prueba de pH? ¿Qué significa esto? ¿Qué color mostró la prueba de cobre? ¿Qué significa esto? ¿Qué color mostró la prueba de dureza? ¿Qué crees que esto significa? ¿Por qué crees que viste estos resultados? ¿Qué resultados crees que verías si el agua a prueba fuera del Río Colorado o del Lago Pleasant? ¿Sería distinto si fuese de agua purificada? ¿Crees que los resultados serían los mismos que todas las pruebas de agua? ¿Por qué o por qué no? ¿Qué otras pruebas podrías llevar a cabo usando tus pruebas de agua? ¿Qué tipos de carreras involucran examinar o llevar a cabo pruebas de campo de agua?

Conexión familiar: ¿Cuál fue tu parte favorita de hacer esta actividad con tus hijos? ¿Qué otros materiales usaste o experimentaste además de los que fueron provistos?

ARIZONA SCIENCE CENTER

STEM To-Go

Family Engineering

Celebrate Arizona – Week 9

This week you had the opportunity to participate in an actual Design Squad Challenge. What did you learn from the activity? How would you have changed it? Now you get that chance! You and your family will build an emergency shelter that is sturdy and can fit your whole family. Using the supplies provided and any recyclable materials you have at home, build a family shelter.

Supplies: Large garbage bag, string, tape, recyclable materials you find in your home

Challenge: Can you build an emergency shelter that can hold your entire family?

1. Brainstorm ideas for your shelter. Think about what recyclable materials you have that could assist your plan.
2. Build your shelter as a family.
3. Test your shelter. Would it provide safety from weather issues? Discuss where your shelter would work in Arizona and where it wouldn't work. If it wouldn't work somewhere, why? Think about what adjustments you could make to the design.
4. Redesign and make modifications to the structure.
5. Discuss: What design did you select? Was it successful? Did you have to modify it at anytime? Why? Is it stable? How can you make it more stable? What forces are affecting your shelter? How can you counteract those forces? Would you use this shelter in case of an emergency? Would it be an effective shelter in the desert region? Mountain region? Plateau region? In the summer? Winter? During a rain/snow/dust storm?

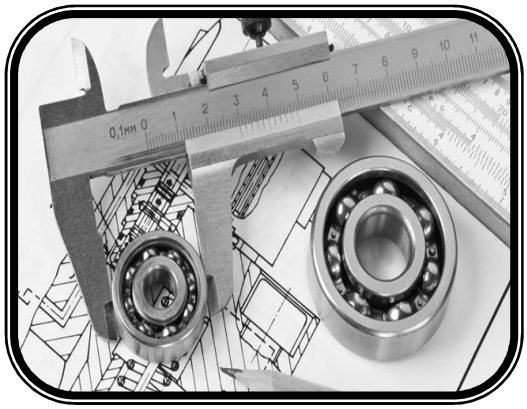

Think About: What forces or shapes work the best for your shelter? Why? What modifications would you like to make if you were to build it again?

Family Connection: What was your favorite part of doing this activity with your child?
What other materials did you use or experiment with other than what we provided?

ARIZONA SCIENCE CENTER

STEM To-Go

Ingeniería en la Familia

Celebra Arizona – Semana 9

Esta semana tuviste la oportunidad de participar en un reto de diseño en el Design Squad Challenge. ¿Qué aprendiste de la actividad? ¿Cómo lo hubieras cambiado? Ahora tienes la oportunidad. Tu familia y tú van a construir un albergue de emergencias que sea fuerte y proteja a toda tu familia. Usando los materiales disponibles y cualquier material de reciclaje que tengas en casa, construye un albergue familiar.

Materiales: Bolsas de basura grandes, hilo, cinta adhesiva, materiales de reciclaje que puedas encontrar en casa.

Reto: ¿Puedes construir un albergue de emergencia que pueda proteger a toda tu familia?

1. Desarrolla ideas para construir tu albergue. Piensa sobre qué materiales de reciclaje tienes disponibles que pudiesen ayudarte en tu diseño.
2. Construye tu albergue como una familia.
3. Pon a prueba tu albergue. ¿Proveería protección de las inclemencias del tiempo? Analiza en cuales partes de Arizona funcionaría tu albergue y en cuales lugares no. ¿Si no puede funcionar en ciertos lugares, por qué? Piensa sobre qué ajustes podrías hacerle a tu diseño.
4. Rediseña y haz modificaciones a la estructura.
5. ¿Cuál diseño seleccionaste? ¿Fue exitoso? ¿Tuviste que modificarlo en algún momento? ¿Por qué? ¿Es el diseño estable? ¿Cómo puedes contrarrestar tales fuerzas? ¿Podrías usar este albergue en caso de una emergencia? ¿Sería un albergue efectivo en un área de desierto? ¿Región montañosa? ¿Región plana? ¿En el verano? ¿Durante el invierno? ¿Durante una lluvia, bajo nieve, o suficientemente fuerte como para resistir una tormenta de arena?

Piensa sobre: ¿Qué fuerzas o formas trabajan mejor para crear el albergue? ¿Por qué? ¿Qué modificaciones te gustaría hacerle al albergue si lo construyeras de nuevo?

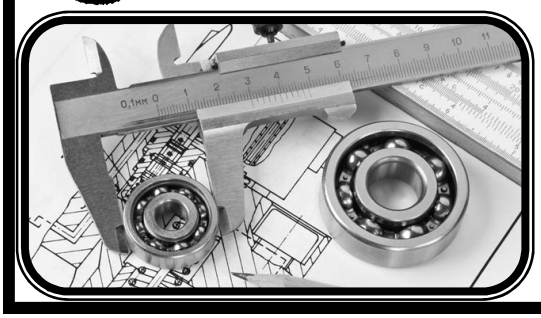

Conexión familiar: ¿Cuál fue tu parte favorita de hacer esta actividad con tus hijos? ¿Qué otros materiales usaste o experimentaste además de los que fueron provistos?