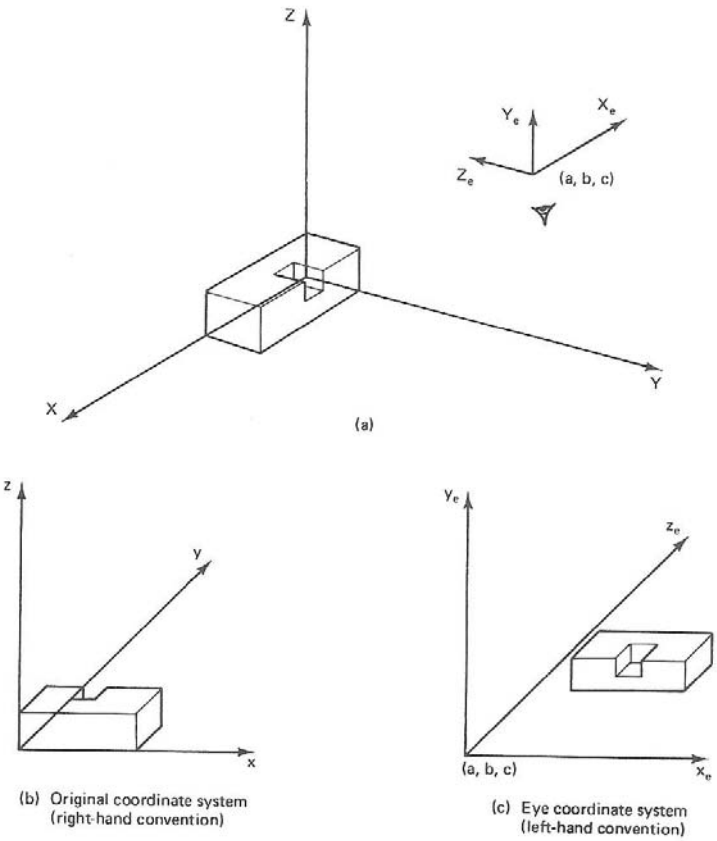

Figure 2.40. Transform the view.

Figure 2.40(c) has been transformed using the following sequence:

1. Translate to location (a, b, c).
2. Rotate about X $(-90°)$.
3. Mirror image on X.

The concatenated transformation matrix can be written as follows. Let $\theta = -90°$:

$$\mathbf{T} = \begin{bmatrix} 1 & 0 & 0 & 0 \\ 0 & 1 & 0 & 0 \\ 0 & 0 & 1 & 0 \\ -a & -b & -c & 1 \end{bmatrix} \begin{bmatrix} 1 & 0 & 0 & 0 \\ 0 & \cos\theta & \sin\theta & 0 \\ 0 & -\sin\theta & \cos\theta & 0 \\ 0 & 0 & 0 & 1 \end{bmatrix} \begin{bmatrix} -1 & 0 & 0 & 0 \\ 0 & 1 & 0 & 0 \\ 0 & 0 & 1 & 0 \\ 0 & 0 & 0 & 1 \end{bmatrix} \tag{2.33}$$

process attributes, only a point estimator is used to predict the surface-finish capability. This point estimator can be taken from an existing data table such as that shown in Figure 3.1.

Table 3.3 gives some example process-boundary data taken from Wysk (1977). As mentioned before, there is no universal process-boundary data. Each machine tool has its unique process capability.

INTERMEDIATE MATERIALS

3.4 BASIC MACHINING CALCULATIONS

Before we start the topic of process capability, it is worthwhile to discuss the basic calculations of machining. Our discussion is limited to drilling, turning, and milling. Calculations for other conventional machining processes can be derived from the ones discussed.

3.4.1 Feed and Feed Rate

Feed, f, can be defined as the relative lateral movement between the tool and the workpiece during a machining operation. It corresponds to the thickness of the chip produced by the operation shown in Figure 3.18. In turning and drilling operations, it is defined as the advancement of the cutter per revolution of the workpiece (turning) or tool (drilling). The typical unit is ipr (inch per revolution). In milling, it is defined as the advancement of the cutter per cutter-tooth revolution; the unit is inch per revolution per tooth. Feed rate, V_f, is defined as the speed of feed; the unit is ipm (inch per minute).

$$V_f = fnN \tag{3.17}$$

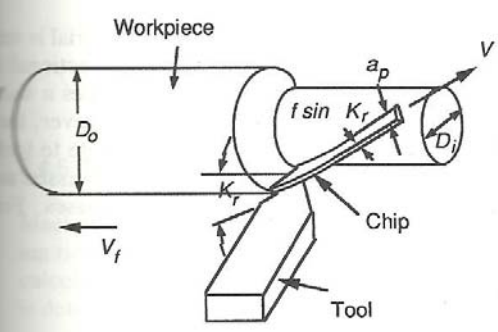

Figure 3.18. Chip formation.

Tool: ISO SNMA 120408-P20
Holder: ISO PBSNR 2525
Material: SAE 1045 CD
Machine: Engine lathe
feed ~ 0.05 – 2.5 mm/rev
speed ~ 20 – 1600 rpm
power = 7.5 kW
machine efficiency = 0.80

$$t^* = \left(\frac{1}{n} - 1\right) \frac{L}{L+e} \left(t_c + \frac{C_e}{C_m}\right) = 10 \text{ min}$$

C_m = \$0.25/min t_h = 1.35 min/pc
C_e = \$0.50/edge t_i = 0.2 min/pass
C_b = \$7.20/batch t_c = 1 min/edge
D = 100 mm L = 250 mm
e = 50 mm N_b = 25
p = 0.1 a_p = 3 mm K = 0.3

$$vt^{0.2} f^{0.3} a_p^{0.18} = 220$$

$$F_c = 250\, V^{-0.12} f^{0.75} a_p f \text{ 170 kp}$$

$$P_e = F_c v/6120 \leqslant 6 \text{ kW}$$

$$R_a = 2.43 \times 10^4\, v^{-1.52} f \leqslant 1.25\ \mu\text{m}$$

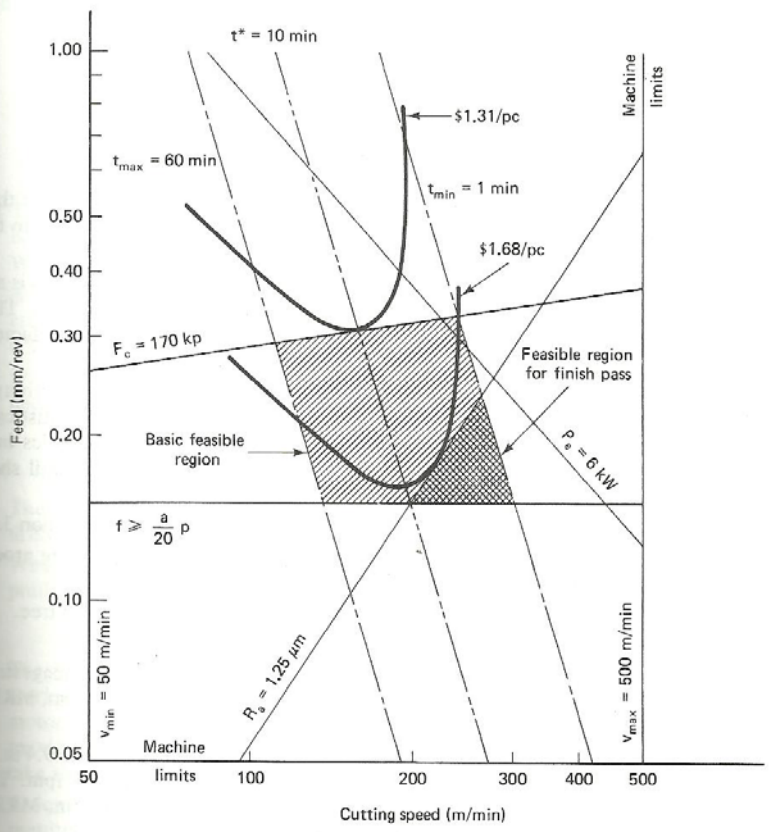

Figure 3.25. Contours of unit cost and the feasible region.

where n = the number of teeth in the cutter, for milling; $n = 1$, for drilling and turning
N = rotation speed of the cutter (drilling and milling) or workpiece (turning) in rpm

3.4.2 Cutting Speed

The cutting speed, V, can be defined as the maximum linear speed between the tool and the workpiece. The cutting speed for drilling, turning, and milling can be determined as a function of the workpiece or the tool diameter, D, and the rotation speed, N.

$$V = \frac{\pi DN}{12} \tag{3.18}$$

where V = speed, feet per minute
D = diameter, inches
N = rotational speed, rpm

3.4.3 Depth of Cut

The depth of cut is determined by the width of the chip (Figure 3.15). During the roughing operation, the depth of cut is usually much greater than that for the finishing operation. For turning, it is one-half the difference between the inner and the outer diameters of the workpiece.

$$a_p = \frac{D_o - D_i}{2} \tag{3.19}$$

where a_p = depth of cut, inches
D_o = outer diameter, inches
D_i = inner diameter, inches

3.4.4 Metal-Removal Rate

The metal-removal rate (MRR) is a measurement of how fast material is removed from a workpiece. It can be calculated by multiplying the cross-sectional area of the chip by the speed. A large metal-removal rate (MRR) produces a short processing time, and a low MRR yields a long processing time. However, the MRR also affects the life of a cutter. The effect of the metal-removal rate to tool life is discussed later. The unit of the metal-removal rate is usually expressed as cubic inches per minute. A different formula is used for different processes. For drilling, the cross section area of the chip is $\pi D^2/4$.

$$\text{MRR} = \frac{\pi D^2}{4} V_f = \frac{\pi D^2}{4} fN \tag{3.20}$$

Dia. ≤ 0.5	T	T	T	T	F	F	F	F	F	F
0.5 < Dia. ≤ 1.0	F	F	F	F	T	T	T	T	T	F
1.0 < Dia. ≤ 2.0	F	F	F	F	F	F	F	F	F	
10 < Dia.	F	F	F	F	F	F	F	F	F	
T.P. ≤ 0.002	F	F			F	F	F	F	T	F
0.002 < T.P. ≤ 0.01	F	F			F	F	T	T	F	F
0.01 < T.P.	T	T	F	F	T	T	F	F	F	T
Tol ≤ 0.002	F		F	T	F		F	T	T	F
0.002 < Tol ≤ 0.01	F			F	F		T	F	F	F
0.01 < Tol	T	F		F	T	F	F	F	F	T
Drill	1	1	1	1	1	1	1	1	1	1
Ream		2								
Finish bore			2	3		2	2	3	3	
Rapid travel			3						4	

T.P. = true position

Figure 3.26.

3.10 The end of the part described in Review Question 3.9 is to be faced. The spindle rpm is set so as not to produce a cutting speed higher than the suggested speed (450 fpm). What are the feed speed, spindle rpm, MRR, and cutting time?

3.11 A volume of 10 in. long, 5 in. wide, and 0.5 in. thick is to be removed by a face-milling cutter. The cutter is 3 in. in diameter and has six teeth. The maximum depth of cut is 0.3 in. What are the feed speed, spindle rpm, and cutting time?

3.12 When a 0.5-in. high-speed steel (HSS) drill on SAE 3140 steel at a feed of 0.03 ipr is used, the tool-life equation can be expressed as

$$t = \frac{6.16 \times 10^{15}}{V^{6.25}}$$

The hole drilled is 2 in. deep. If the selected speed is 200 fpm, how many holes can be drilled before we need to change the drill?

3.13 When a HSS tool is used to turn a stainless-steel shaft, the cutting force can be predicted:

$$F_c = 151{,}000 f^{0.85} a_p^{0.96}$$

The recommended speed is 200 fpm and the feed is 0.03 ipr. The diameter of the workpiece is 3 in. and the final diameter is 2.8 in. The part is 4 in. long. A 10-hp motor is used to drive the machine. The machine efficiency is 0.90. What is the maximum depth of cut based on the power-consumption constraint? How long will it take to finish the workpiece?

3.14 Assume the workpiece in Review Question 3.9 is made of alloy steel. What is the required cutting power? Use Figure 3.23.

where D = drill diameter, inches
V_f = feed rate, inches per minute
f = feed, inches per revolution
N = rotational speed, rpm

Since

$$N = \frac{12V}{\pi D} \tag{3.21}$$

$$\text{MRR} = \frac{\pi D^2}{4} f \frac{12V}{\pi D} = 3DfV \tag{3.22}$$

For turning, the chip width is $(D_o - D_i)/2$, where D_o and D_i are outer and inner workpiece diameters, respectively. The cross-sectional area is $\pi(D_o^2 - D_i^2)/4$. Therefore, the metal removal rate is

$$\text{MRR} = \frac{\pi(D_o^2 - D_i^2)}{4} V_f = \frac{\pi(D_o^2 - D_i^2)}{4} fN \tag{3.23}$$

$$N = \frac{12V}{\pi(D_o + D_i)/2} \tag{3.24}$$

$$\text{MRR} = 6(D_o - D_i)fV \tag{3.25}$$

For milling processes, the chip cross-sectional area is (Figure 3.19)

$$A = a_p w \tag{3.26}$$

$$\text{MRR} = a_p w V_f = a_p w f n N \tag{3.27}$$

$$N = \frac{12V}{\pi D}$$

$$\text{MRR} = \frac{12 a_p w n}{\pi D} fV \tag{3.28}$$

where a_p = depth of cut, inches
w = width of cut, inches
n = number of teeth on the cutter
D = cutter diameter, inches
f = feed, inches per tooth per revolution
V = speed, feet per minute

3.4.5 Machining Time

Machining time is the total amount of time it takes to finish a workpiece. Machining time is a function of workpiece size, depth of cut, feed, and speed. It can be calculated by dividing the tool-path length by the feed speed. The tool-path length is determined by the length of the workpiece, overtravel of the tool for clearance,